WITTENSTEIN

Products 2008

Low backlash planetary gearheads

Servo right-angle gearheads

Mechanical systems



WITTENSTEIN

Products 2008

Low backlash planetary gearheads
Servo right-angle gearheads
Mechanical systems

© 2008 by WITTENSTEIN alpha GmbH

All technical specifications were correct at the time of going to print. We are continually developing our products and therefore reserve the right to make modifications. This documentation is subject to occasional errors. Please appreciate that legal claims cannot be asserted as a result of incorrect specifications, illustrations or descriptions. The text, photos, technical drawings and any other illustrations printed in this publication are protected property of WITTENSTEIN alpha GmbH.
Further use of this material in printed or electronic format requires express approval from WITTENSTEIN alpha GmbH. Any form of duplication, translation, editing, transfer to microfilm or storage on electronic systems is not permitted without express permission from WITTENSTEIN alpha GmbH.

Contents

Your partner in excellence	6
The WITTENSTEIN alpha product range	18
Gearhead selection overview	20
Low backlash planetary gearheads	22
alpheno®	24
TP+	28
SP+	66
LP+/LPB+	112
alphira®	124
Servo right-angle gearheads	134
TK+/TPK+	136
SK+/SPK+	156
HG+	176
LK+/LPK+	190
V-DRIVE®	212
Mechanical systems	220
alpha Rack & Pinion System	222
alpha IQ	250
Couplings	254
Information	274
Quick gearhead selection	276
Gearhead – Detailed design	278
V-DRIVE® – Detailed design	282
Coupling – Detailed design	286
Glossary	288
Order information	294

Our guiding principle - the belief that our systems and products make life easier for our customers and their businesses more successful and efficient. We are continually setting standards and applying advanced technology to give our customers a competitive edge on the market.

WITTENSTEIN

The **group**

WITTENSTEIN | alpha

Specialized fields united in one company.

WITTENSTEIN AG is active in seven innovative fields of business:
Servo gearheads, servo drive systems, medical technology, miniature servo units, innovative toothing technology, powerful actuator systems and intelligent electronic solutions. Each company in the WITTENSTEIN group strives to make advances in their respective field and develop specialized solutions to perfection. The companies that use the WITTENSTEIN name are committed to paving the way for greater freedom of innovation in the future.

Drives, controls and positional accuracy are areas that require maximum precision. Products manufactured by WITTENSTEIN alpha GmbH are setting benchmarks worldwide in the fields of mechanical engineering and drive technology. From low backlash planetary gearheads, servo right-angle gearheads and complete drive units to the comprehensive cymex® engineering software package and expert technical consultation: WITTENSTEIN alpha GmbH has redefined the meaning of precision, an essential benchmark and the most important attribute of our products and services.



WITTENSTEIN | electronics

WITTENSTEIN electronics GmbH develops, manufactures and distributes complex electronics and software components for drive technology. Products and services designed for complex mechatronic systems are capable of working under extreme ambient conditions and characterized by their outstanding reliability.

WITTENSTEIN | motion control

A system functions best when all the individual parts are integrated perfectly. The harmonious combination of motors, precision gearheads, electronics, sensors and software integrated in bus-compatible, electromechanical rotary and linear servo systems manufactured by WITTENSTEIN motion control GmbH is more than impressive. Integration plays an innovative role here and is a decisive factor in increasing power density and dynamics.

WITTENSTEIN | cyber motor

Always on the move, always active: Dynamics that accelerate progress. Servo motors manufactured by WITTENSTEIN cyber motor GmbH are compact in size yet capable of achieving maximum dynamics aided by permanent magnet excitation and brushless three-phase current technology – even under extreme ambient conditions such as UHV/FV/HV, radioactivity and HT. WITTENSTEIN cyber motor GmbH uses power, performance and an extended service life to define the dynamics of its products.



WITTENSTEIN | intens

Intelligence fascinates, inspires and adds that extra dimension. Innovative medical technology manufactured by WITTENSTEIN intens GmbH, which focuses mainly on intelligent implants, achieves all of the above. FITBONE® is currently the only fully implantable intramedullary nail for bone extension that can be controlled and adjusted via electromechanical traction. Intelligence is crucial to every step of the development process, right up to the end product.

WITTENSTEIN | bastian

Those who subscribe to individuality are forever confronted with new challenges. Whether in the design, manufacture, measurement or testing phase – when developing innovative gearing technology, WITTENSTEIN bastian GmbH always considers the unique requirements of the different application areas. This is how individual solutions for motor racing, aerospace and robotics applications are produced. WITTENSTEIN bastian GmbH redefines the concept of individuality on a daily basis: because the company is open to innovation and has the courage to explore unknown territory.

WITTENSTEIN | aerospace & simulation

Maximum effect, minimum weight – the efficiency of each component plays a vital role in the aerospace industry. The powerful electromechanical actuator systems manufactured by WITTENSTEIN aerospace & simulation GmbH represent both high quality and unique compactness. These highly efficient systems are used in the new Airbus A380, prototypes of the Phoenix space plane and both military and commercial simulators. Efficiency has adopted a unique meaning: Maximum performance combined with outstanding freedom of innovation.



Value based

Understanding partners.
Communicating processes.
Achieving objectives.

Our systems and products are aimed at making your life easier for a more successful business.

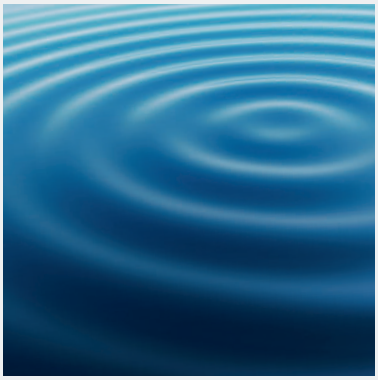

More than 1200 employees at more than 60 locations. Always there where you need us.
Our vision of a successful future together.

WITTENSTEIN worldwide

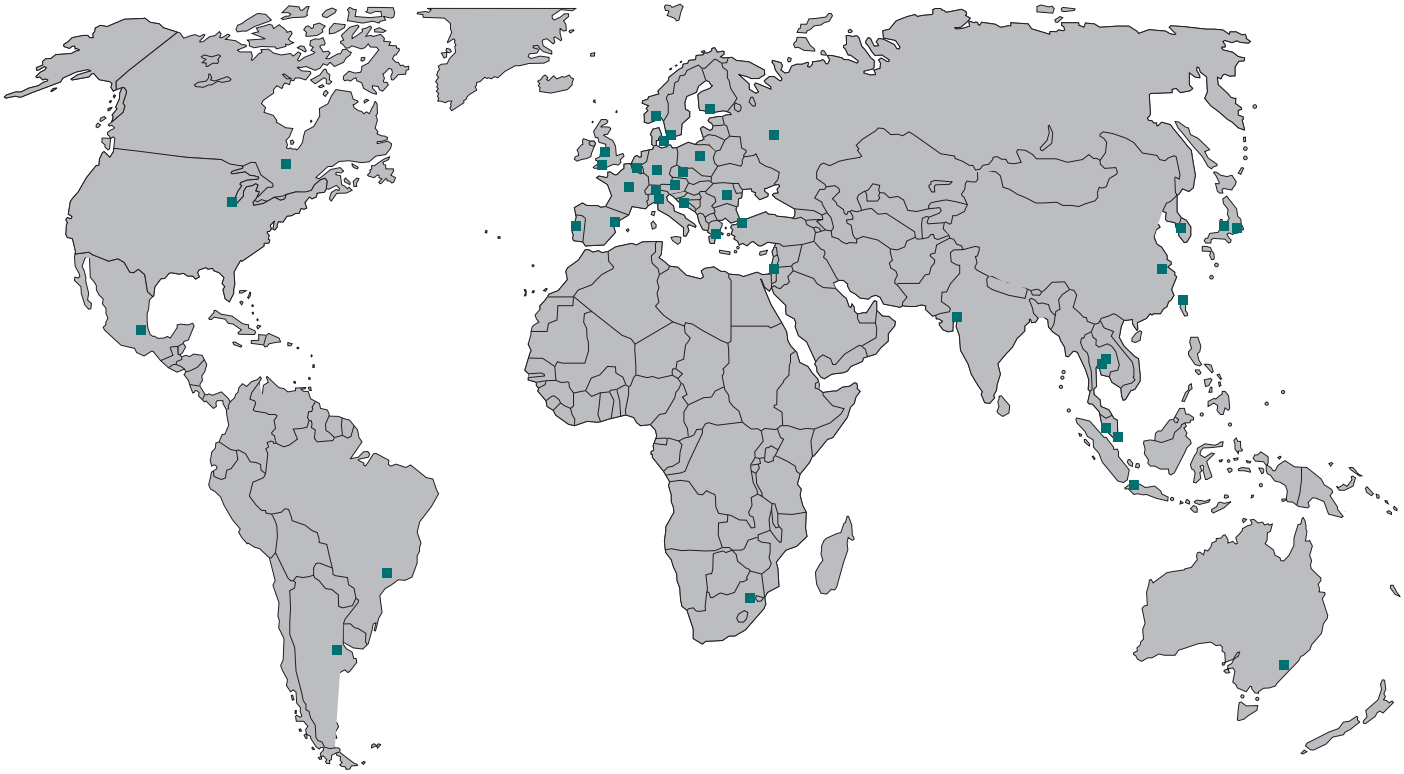

Argentina · Australia · Austria · Belgium · Brazil
Canada · China · Croatia · Czech Republic
Denmark · Egypt · Finland · France · Germany
Greece · Hungary · India · Israel · Italy · Japan
Korea Republic · Luxembourg · Malaysia · Mexico
Norway · Poland · Portugal · Puerto Rico · Romania
Russia · Singapore · South Africa · Spain · Sweden
Switzerland · Taiwan · Thailand · The Netherlands
Turkey · United Kingdom · United States of America

Network

Five continents.
Three oceans.
More than six billion people.

The WITTENSTEIN group is active in more than 40 countries. An international network with unlimited communication and interaction.

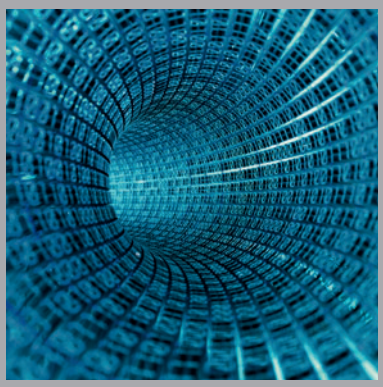

High performance

Journey to the center of the Earth. Voyage of discovery in space. The hunt for the Formula 1 record. WITTENSTEIN drive technology is predominantly used in applications with special requirements. In the most diverse branches of industry. At locations near and far. Under the most extreme conditions. WITTENSTEIN is setting benchmarks worldwide. With outstanding performance and individual solutions.



WITTENSTEIN – Products that know no limits. High-precision drive systems for diverse branches of industry: Drive technology · Electronics · Machine tools · Manufacturing systems · Robotics, automation, handling · Textile, printing and paper machines · Laser, glass and wood processing machines · Food and packaging machines · Pneumatics · Semiconductor industry · Linear technology ·

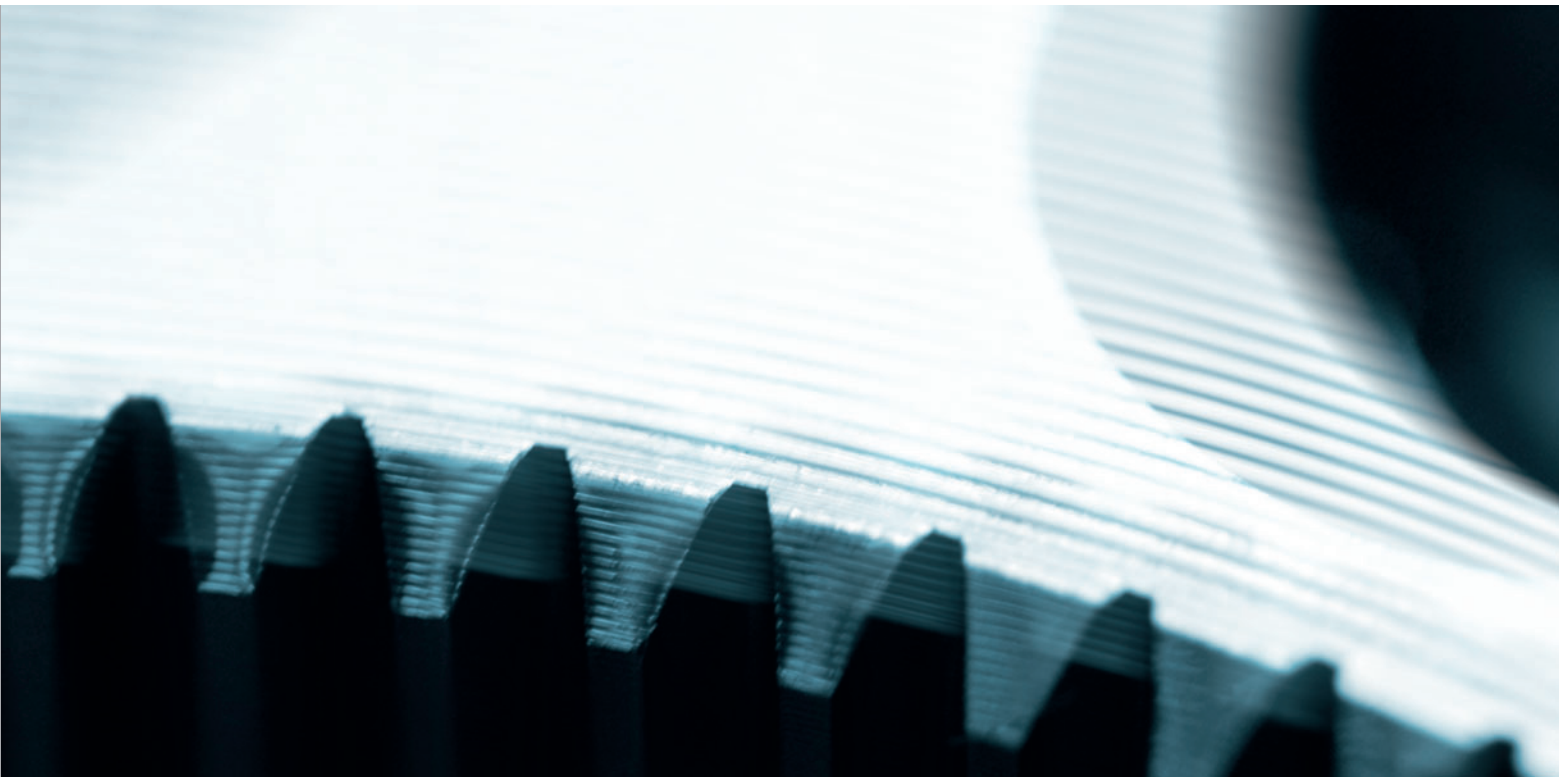

WITTENSTEIN –
Products that know no limits

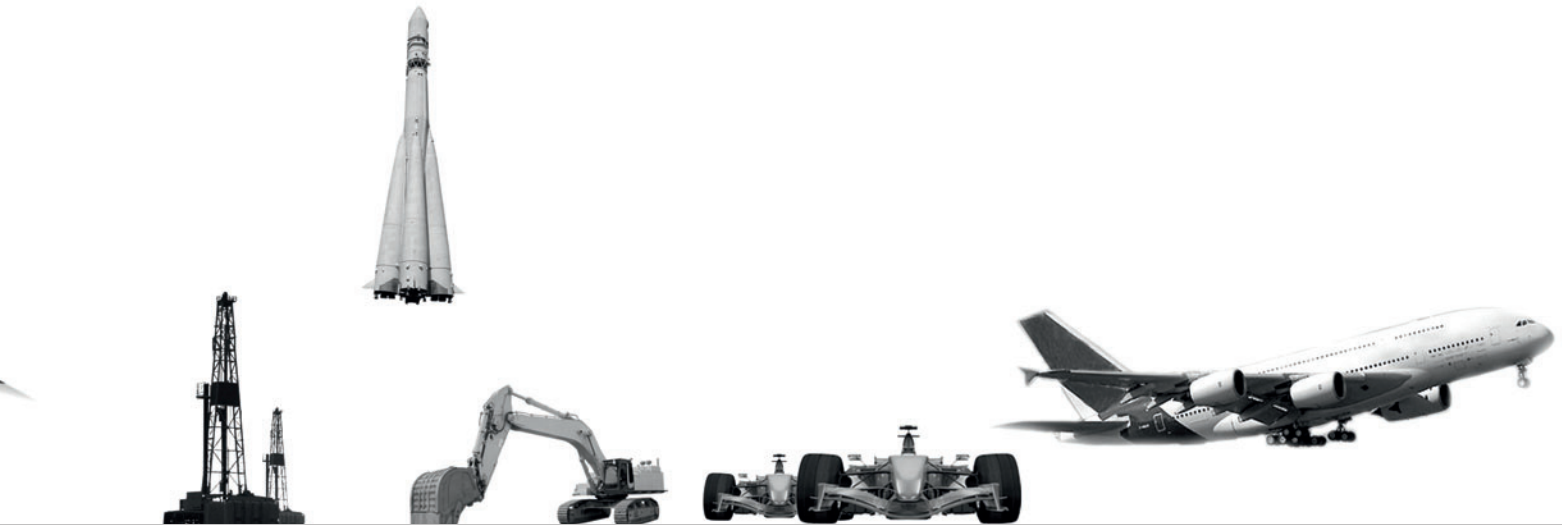

Photo Phoenix: EADS Astrium

Aerospace industry · Extreme ambient conditions (such as high temperatures, ultra-high vacuums) · Crude oil exploration · Medical technology · Pharmaceutical industry · Motor racing · Automotive and tire industry · Optical media · Vehicle technology · Defense technology.

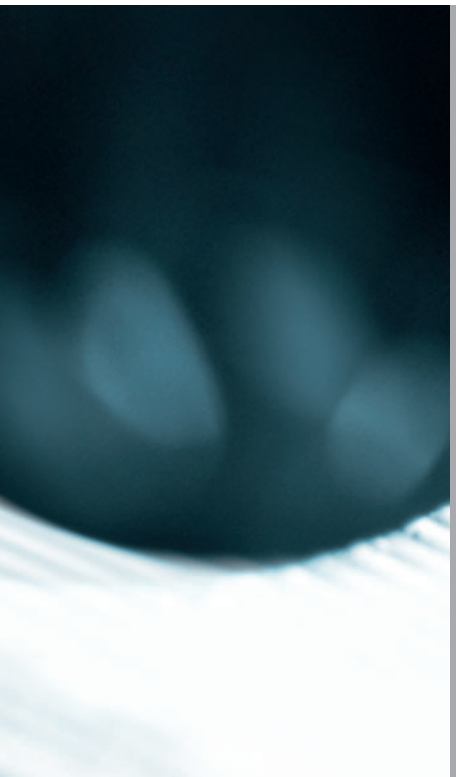

For applications requiring compactness, power and precision.

When developing products for wood processing technology, printing technology or robotics, automation and handling technology, we always strive to fulfill demanding requirements and think beyond our limits. With new ideas and innovative systems that give us fresh impetus to promote forward thinking and develop revolutionary concepts.

WITTENSTEIN | alpha



Business to **business**

Different needs.
Individual strategies.
Fascinating results.

We understand what counts in your business and use this knowledge to develop compatible solutions that increase efficiency.

WITTENSTEIN alpha –
Your partner in excellence



Machine tools and manufacturing systems
Maximum precision, process stability and productivity thanks to durable mechanical system solutions virtually free of backlash and torsion used in feed-, swivel and auxiliary axes.

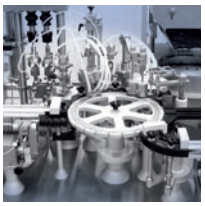

Food and packaging machines
A range of gearheads designed for all types of axis used in packaging technology - including washdown models - for maximum operating efficiency, machine flexibility and cycle speeds.



© MAKA

Wood processing machines
Mechanical systems such as gearheads with pinion/rack, on-site consultation and a comprehensive knowledge of engineering form an impressive package that guarantees a high-quality end product with maximum efficiency.



Printing and paper machines
Innovative gearhead products that offer high constant speeds, seamless synchronization and permanent precision – the perfect solution for high-quality printing processes and other continuous applications. Available as an option: Integrated sensors for monitoring web tension and similar parameters.



Robotics, automation and handling technology
A wide range of servo gearheads and mechanical drive systems, from low-cost to high-end products for all types of robot and auxiliary axles such as drive axles and tool manipulators.



For WITTENSTEIN, customer service means: **offering customers a quick, reliable and professional service**.
Being an excellent and consistently reliable partner for our global customers is a fundamental principle of our company philosophy and also helps us understand the importance of good **service**.

speedline® saves time
– Your gearhead ready for delivery in only 24 hours

Would you like to be more flexible, implement your ideas more quickly and be able to make snap decisions? Then speedline® is the right service for you. We will assemble a standard series SP+, TP+ and LP+ within 24 or 48 hours ex works at attractive conditions – customized to fulfill your individual requirements.

Like all WITTENSTEIN alpha products, you can rely on speedline® to carry out a 100% quality control check on all orders placed. A reliable logistics concept guarantees a prompt delivery to your doorstep.

Your gearhead will be ready within 24 or 48 hours ex works.

speedline®
by WITTENSTEIN alpha



24h hotline/Service Center
Technical support from experienced professionals available when you need it.

speedline® team
You need your gear reducer in the next 24 to 48 hours?

Contact your local sales office.
Please see the back cover for contact information.

Web service – Online access:

You can now access all the relevant information directly online via the web service. For example:
- CAD files in different formats
- installation videos
- operating instructions
- motor installation visuals

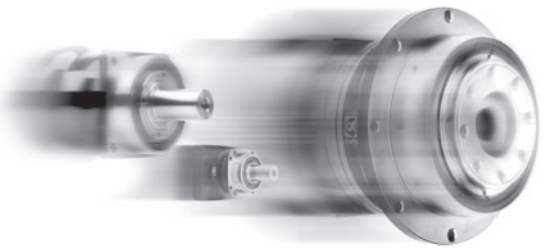

Service made to **measure**

We believe that a made-to-measure service should always include the following:
- Repairs/overhauls
- Spare part deliveries
- On-site deployment
- Condition inspections

We also offer the following services:
- Material and microscopic analyses
- Oil analyses
- Vibration measurement
- Synchronization measurement
- Advice on sealing technology and tribology

cymex Statistics

All statistics relating to experiences made in the field have been documented over the years. cymex Statistics now enables you to evaluate these statistics with a view to developing quality assurance measures for the future.

This knowledge can also be used for:
- lifecycle cost analyses
- MTTFF (meantime to first failure)
- reliability calculations
- preventative maintenance measures
- verification of gearhead designs

cymex® 3.1 – Software for drive technology

cymex® enables the simple dimensioning and design of complete drive trains (application + motor + gearhead). Standard predefined applications make precise calculations so much easier.
Consideration for all major influencing factors and specific customer parameters guarantee the perfect design for your drive system.

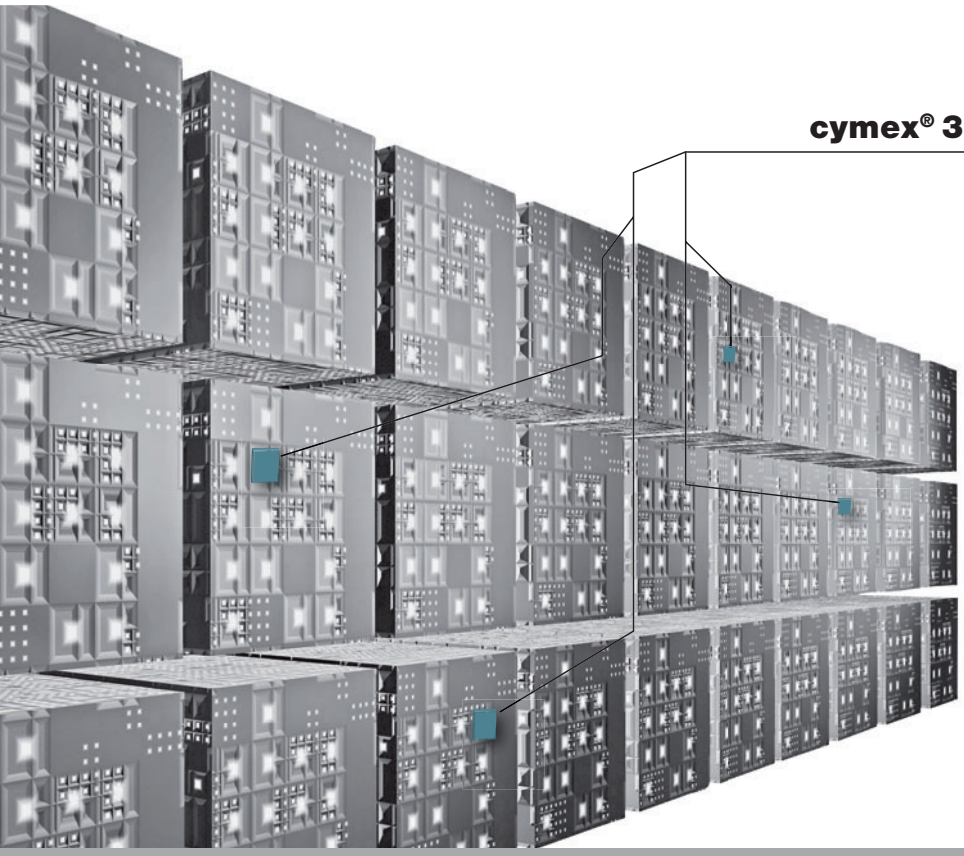

cymex® 3.1 fast – simple – reliable

cyber **m**otion **ex**plorer

Beyond the limits of the catalog

cymex® 3.1 provides access to a wealth of defined values not available in our product catalogs. The software incorporates decades of WITTENSTEIN AG design experience, extending your design options and achieving a 40% increase in gearhead utilization.

The benefits for you:
- greater accuracy during the design process
- maximum power output
- uncovering hidden potential
- possible use of smaller gearheads to reduce costs

If you’re looking for the perfect drive system, benefit from the vast experience of cymex®. Users ranging from experienced to novice rely on this simple software to design gearboxes with unparalleled speed and accuracy.

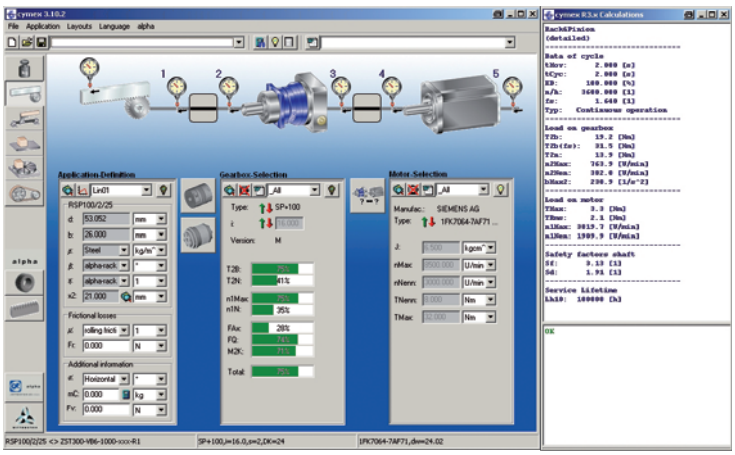

Established features

- Standard predefined applications
- cymex® profiler for creating simple or complex motion and load profiles
- Functions for importing motion profiles from SAM, Excel, ASCII
- Application data and technical data documented in Microsoft Word
- Offline CAD generator: 3D gearhead files including all attached components compatible with the selected motor
- Database containing all current WITTENSTEIN alpha products
- Largest global database with more than 7000 motors offered by all current manufacturers

Seminars

Our WITTENSTEIN academy offers customers and prospective buyers the opportunity to attend seminars on drive technology or training courses on cymex® design software. The content of the training is fully adaptable to fulfill your specific requirements.

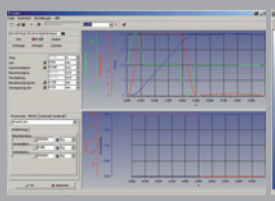

cymex® profiler

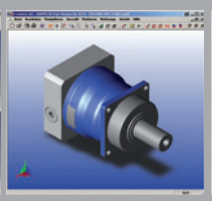

CAD generator

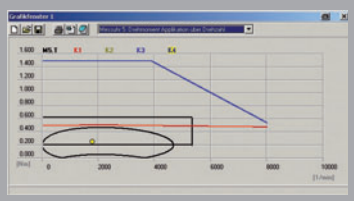

Motor load

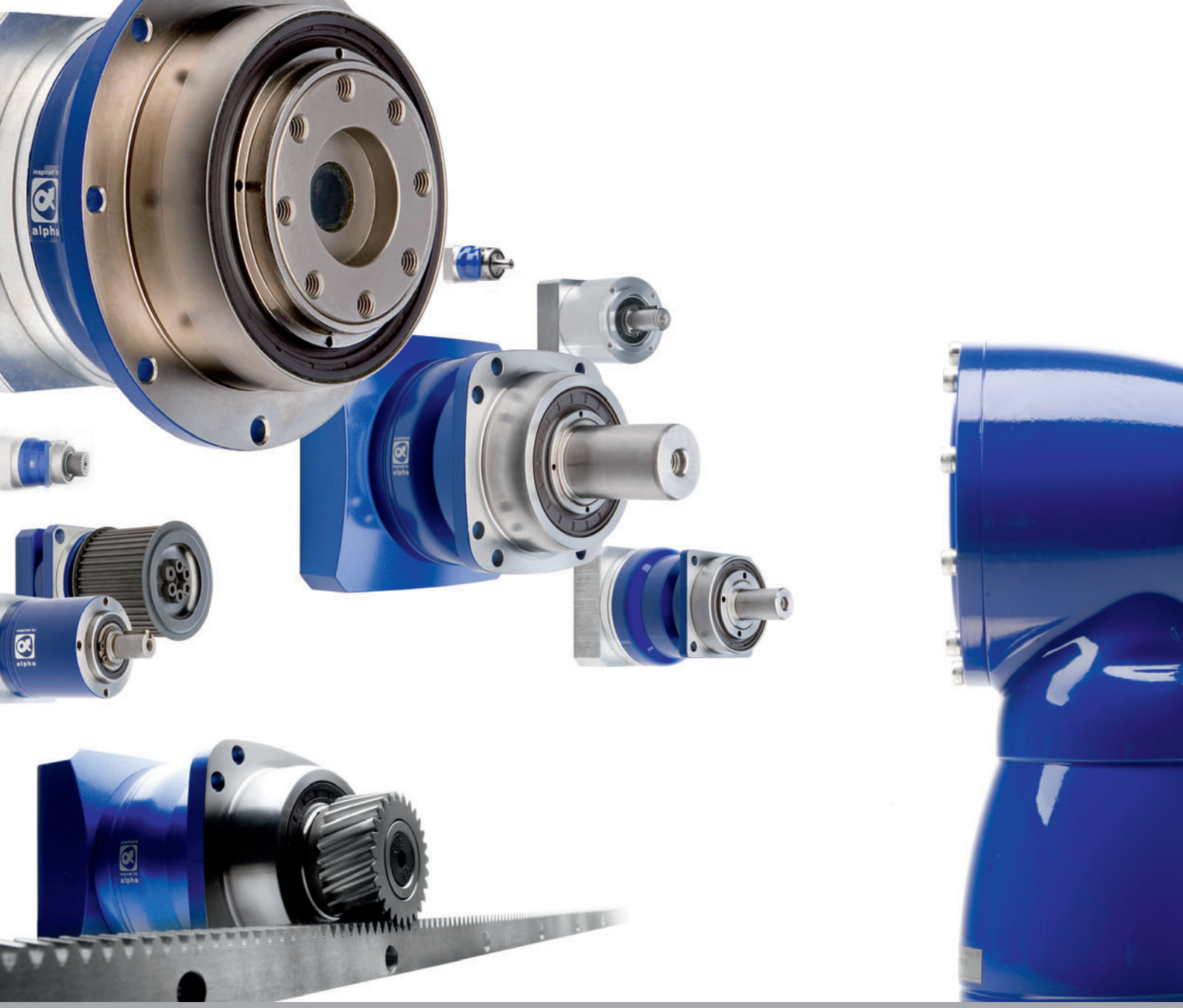

The modular **system**

An unbeatable team.
Drive systems by WITTENSTEIN alpha.

A flexible, variable system consisting of several innovative components: State-of-the-art servo motor and servo gearhead technology, linear systems as well as racks and pinions that achieve unrivalled precision. Unique calculations and simulations allow you to maximize system efficiency.

1+1=1

Drive systems by WITTENSTEIN alpha incorporate different innovations, are designed in line with the modular principle and offer a host of advantages as a result. Maximized speeds and improved positioning accuracy increase productivity and the quality of the product. Effective integration for easier assembly and use.



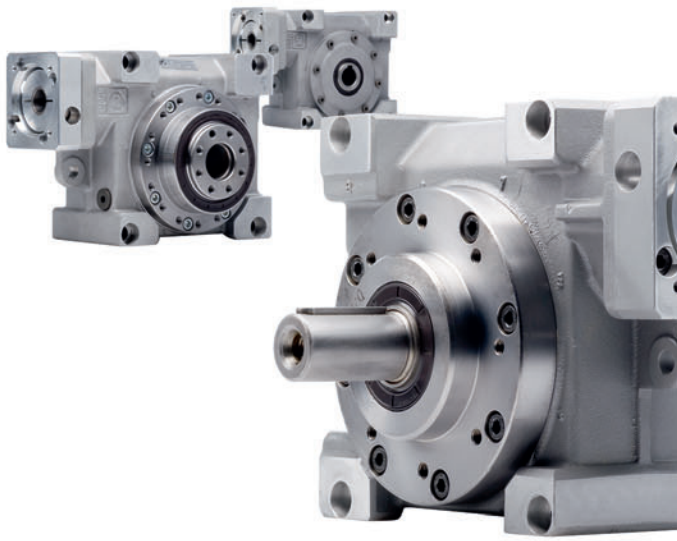

WITTENSTEIN alpha **products**

Low backlash planetary gearheads
alpheno®
TP+
SP+
LP+/LPB+
alphira®

Servo right-angle gearheads
TK+/TPK+
SK+/SPK+
HG+
LK+/LPK+
V-DRIVE®

Mechanical systems
Rack and pinion systems
alpha IQ – Intelligent gearheads
Couplings
Belt pulleys
Additional mechanical drive elements

Gearhead selection overview

		Low backlash planetary gearheads							
									
Products		**alpheno®**	**TP+**	**TP+ High Torque**	**SP+**	**SP+ High Speed**	**LP+**	**LPB+**	**alphira®**
Catalog page		24	28		66		112		124
Max. acceleration torque	Nm		6000	10000	4500	1500	450	220	200
	in.lb		53100	88500	39825	13275	3983	1947	1770
Max. speed	rpm		5500	4500	5500	4500	4000	3700	4000
Ratio	min. i =		4	22	3	3	3	3	5
	max. i =		100	220	100	100	100	10	100
Output type									
Smooth output shaft					●	●	●		
Grooved output shaft					●	●	●		●
Output shaft with involute toothing					●	●			
Output flange			●	●				●	
Torsional backlash									
≤ 1 arcmin			●	●	●				
≤ 2 arcmin			●		●	●			
≤ 4 arcmin			●	●	●	●			
≤ 6 arcmin					●	●			
≤ 10 arcmin						●	●	●	
≤ 15 arcmin							●	●	
≤ 20 arcmin									●
≤ 25 arcmin									●
Drive type									
Motor attachment version			●	●	●	●	●	●	●
Drive shaft			●		●				
Optional (on output)									
With belt pulley								●	
With pinion and rack			●	●	●	●	●		●
With coupling					●	●	●		●

Your individual solution – Please contact us

		Servo right-angle gearheads									
									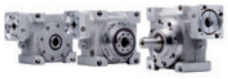		
Products		**TK+**	**TPK+**	**SK+**	**SPK+**	**HG+**	**LK+**	**LPK+**	**VDT**	**VDH**	**VDS**
Catalog page		136		156		176	190		212		
Max. acceleration torque	Nm	640	1600	640	1100	640	93	450	718	718	718
	in.lb	5664	14160	5664	9735	5664	823	3983	6354	6354	6354
Max. speed	rpm	5500	2700	5500	2700	5500	3200	3200	4000	4000	4000
Ratio	min. i =	3	12	3	12	3	1	3	4	4	4
	max. i =	100	100	100	100	100	1	100	40	40	40
Output type											
Smooth output shaft				●	●			●			●
Grooved output shaft				●	●		●	●			●
Output shaft with involute toothing				●	●						●
Output flange		●	●						●		
Hollow shaft		●				●			●	●	
Hollow shaft flange		●							●		
Torsional backlash											
≤ 2 arcmin			●		●						
≤ 4 arcmin		●	●	●	●	●			●	●	●
≤ 6 arcmin		●	●	●	●	●					
≤ 15 arcmin							●	●			
Drive type											
Motor attachment version		●	●	●	●	●	●	●	●	●	●
Optional (on output)											
With pinion and rack		●	●	●	●		●	●	●		●
With coupling				●	●		●	●			●
With two hollow shafts						●				●	
Shrink disc						●				●	

Low backlash planetary gearheads by WITTENSTEIN alpha are sure to win over the hearts and minds of engineers and designers who place emphasis on efficiency, productivity and process stability.

alpheno®



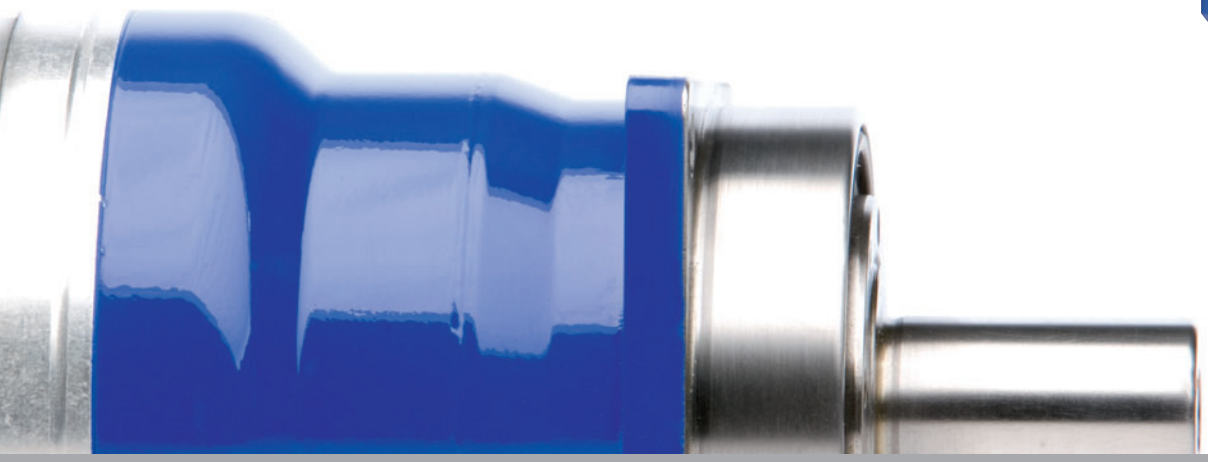

Low backlash planetary gearheads

Maximum power density

And the torques?
Although the previous series achieved outstanding results, we managed to increase the torques by up to 40%.
Raising the limits – Typical of WITTENSTEIN alpha!

Versatile installation

In whatever position you install your + gearhead, the gearhead always contains the same quantity of oil.

The gearheads are so flexible, you can install them vertically, horizontally or with the output facing upwards or downwards.

TP+ **SP+** **LP+** **alphira®**









Simple motor installation

Safe, faultless motor installation is possible in a single working step. The WITTENSTEIN alpha-patented motor attachment is also available with integrated thermal length compensation as an option.

Maximum positioning accuracy

SP and TP represented compact precision. Now the SP+ and TP+ represent maximum compact precision because we have managed to further reduce the torsional play compared with the previous series to less than one angular minute to enable you to significantly increase the positioning accuracy in your application.

Superior running thanks to the helical teeth

The SP+ and TP+ gearheads “whisper”.
Compared to the classic straight-toothed SP and TP, helical-toothed + gearheads are 6 dB(A) quieter during operation. And what a difference 64 instead of 70 decibels makes to added value. You will hardly notice the vibrations made by gearheads from the + series because they run so

World-class lifespan

The seal rings on the + gearhead series were specially developed and the material and geometry are both optimized to ensure an extremely long lifespan!



alpheno® – The personalized solution

Details

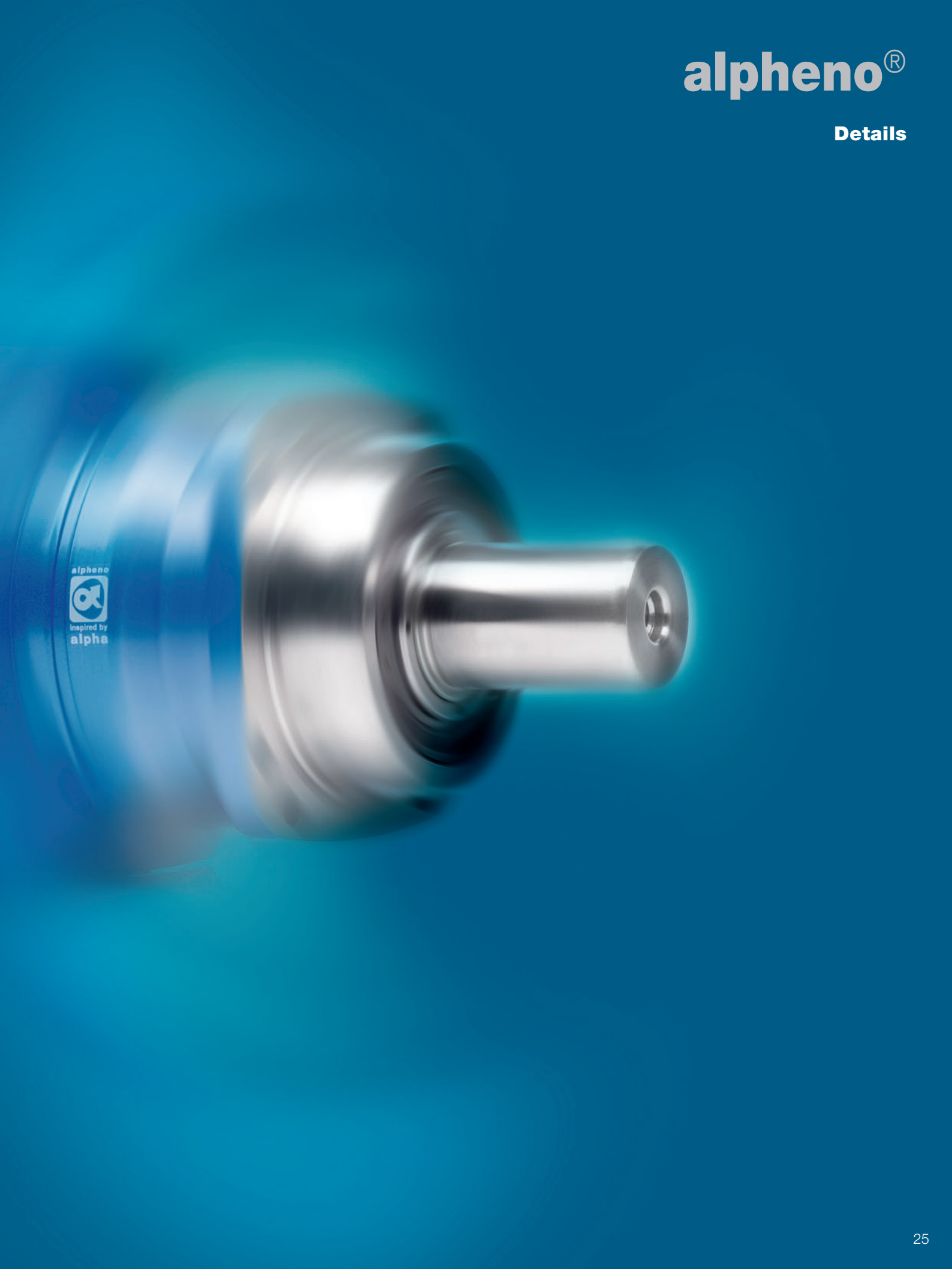

alpheno® – Rendez-vous with the future

Anyone setting their sights on the future should always have the right partner on their side. Form a mutual partnership with us that promotes innovation and development. We develop advanced drive technology solutions together with our customers to help them rise to the challenge of a constantly changing market. An alliance of mutual success is top of our agenda.

alpheno® individual

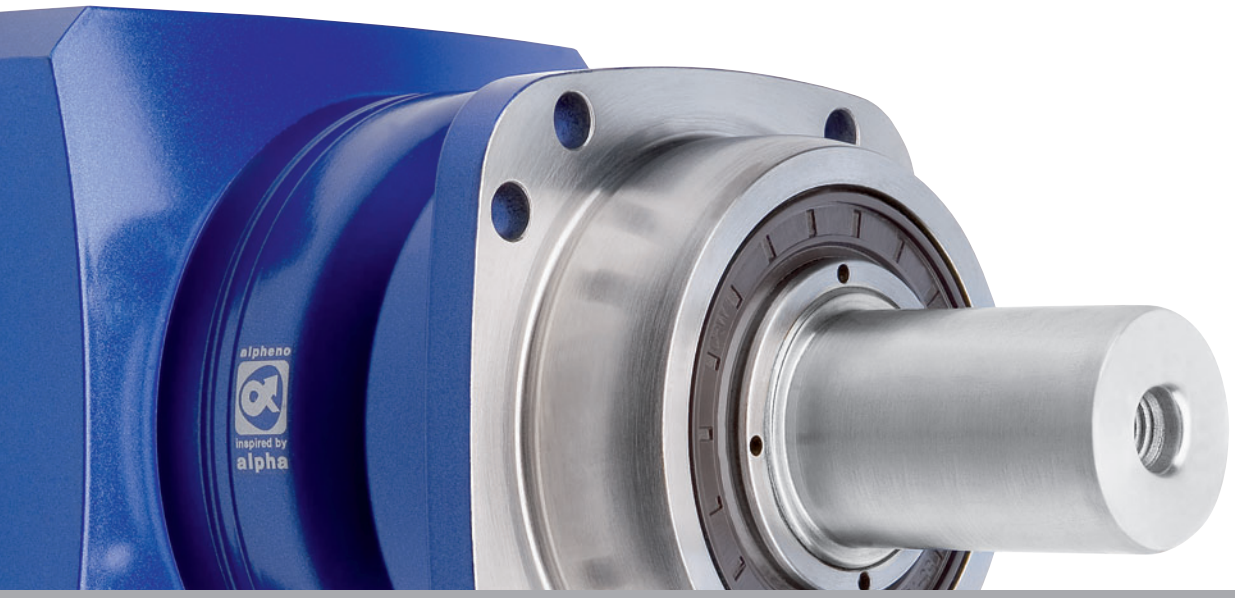

alpheno®

alpheno® – Clear benefits for the customer

Reducing costs
- by decreasing the engineering workload
- shorter development times – time to market
- smaller installation spaces

Increasing profits
- by increasing productivity
- reduced unit costs
- better quality

Securing markets
- through technical innovation
- maximum reliability
- improved competitiveness

Are you searching for a solution specially adapted to your needs? We enter into close collaboration with all our customers to develop personalized solutions and produce the perfect design for your drive applications.





alpheno® – Customized innovation

- if you require an even more compact drive
- if you wish to enhance the performance of your machine
- if you require a specific solution

We offer you compact solutions and improved performance.

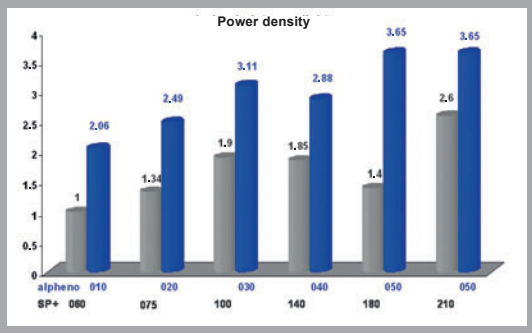

Power density comparison: Industrial standard with alpheno®

alpheno® is quality.

We define quality as a philosophy. An integrated QM system that incorporates state-of-the-art measuring and testing methods assures the quality of our products.





TP+ – Top performer among compact planetary gearheads with drive flange

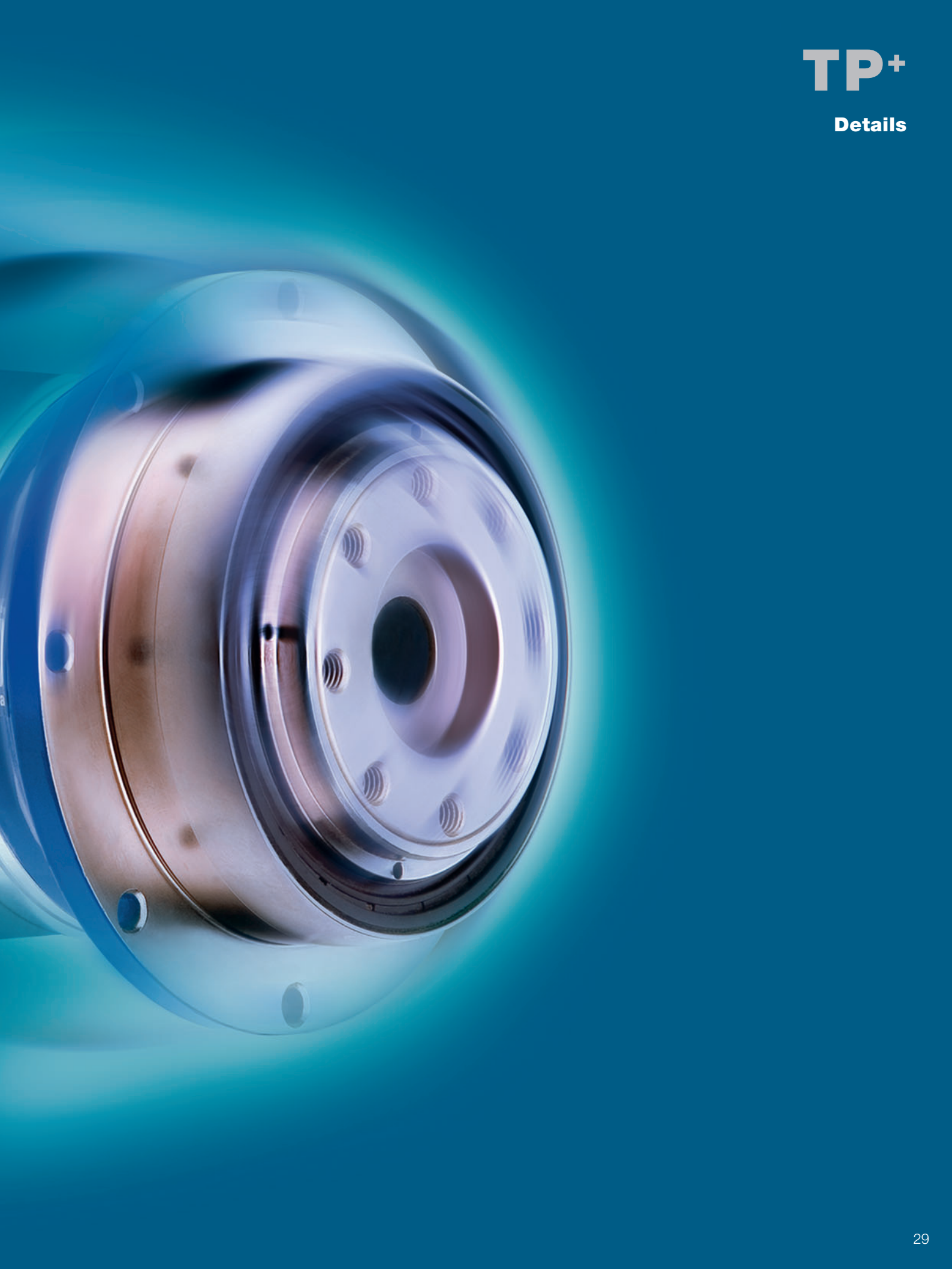

				1-stage			
Ratio [a]			***i***	**4**	**5**	**7**	**10**
Max. acceleration torque (max. 1000 cycles per hour)			T_{2B} Nm	50	50	50	35
			T_{2B} in.lb	443	443	443	310
Nominal output torque (with n_{1N})			T_{2N} Nm	28	28	28	18
			T_{2N} in.lb	248	248	248	159
Emergency stop torque (permitted 1000 times during the service life of the gearhead)			T_{2Not} Nm	100	100	100	100
			T_{2Not} in.lb	885	885	885	885
Nominal input speed (with T_{2N} and 20°C ambient temperature) [b]			n_{1N} rpm	3300	3300	4000	4000
Max. input speed			n_{1Max} rpm	6000	6000	6000	6000
Mean no load running torque (with n_1=3000 rpm and 20°C gearhead temperature) [c]			T_{012} Nm	0.95	0.80	0.60	0.45
			T_{012} in.lb	8.41	7.08	5.31	3.98
Max. torsional backlash			j_t arcmin	Standard ≤ 4 / Reduced ≤ 2			
Torsional rigidity [c]			C_{t12} Nm/ arcmin	12	12	11	8
			C_{t12} in.lb/ arcmin	106	106	97	71
Tilting rigidity			C_{2K} Nm/ arcmin	–			
			C_{2K} in.lb/ arcmin				
Max. axial force [d]			F_{2AMax} N	1630			
			F_{2AMax} lb_f	367			
Max. tilting moment			M_{2KMax} Nm	110			
			M_{2KMax} in.lb	974			
Efficiency at full load			η %	97			
Service life (For calculation, see the Chapter "Information")			L_h h	> 20000			
Weight incl. standard adapter plate			m kg	1.4			
			m lb_m	3.1			
Operating noise (with n_1=3000 rpm no load)			L_{PA} dB(A)	≤ 58			
Max. permitted housing temperature			°C	+90			
			F	194			
Ambient temperature			°C	0 to +40			
			F	32 to 104			
Lubrication				Lubricated for life			
Paint				Blue RAL 5002			
Direction of rotation				Motor and gearhead same direction			
Protection class				IP 65			
Moment of inertia (relates to the drive)	B	11	J_1 kgcm²	0.17	0.14	0.11	0.09
			J_1 10^{-3} in.lb.s²	0.15	0.12	0.10	0.08
Clamping hub diameter [mm]	C	14	J_1 kgcm²	0.25	0.21	0.18	0.17
			J_1 10^{-3} in.lb.s²	0.22	0.19	0.16	0.15
	E	19	J_1 kgcm²	0.57	0.54	0.51	0.49
			J_1 10^{-3} in.lb.s²	0.50	0.47	0.45	0.43

[a] Other ratios available on request
[b] For higher ambient temperatures, please reduce input speed
[c] Valid for clamping hub diameter of 14 mm
[d] Refers to center of the output shaft or flange

Motor shaft diameter [mm]

	View A	View B
up to 11 [4] (B) clamping hub diameter	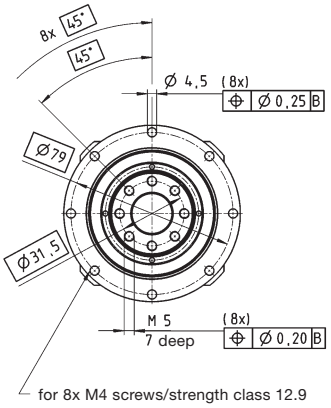	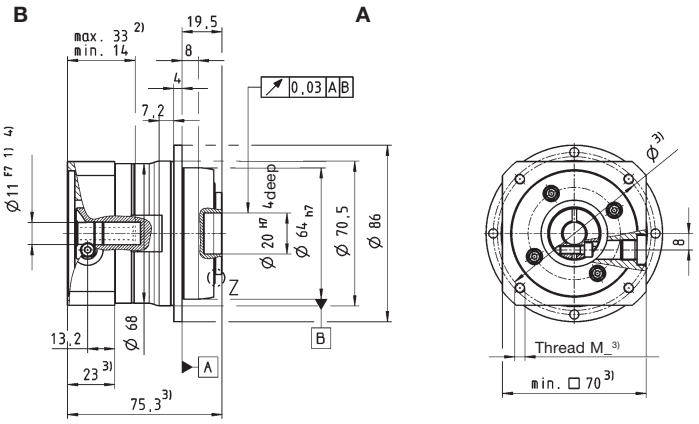
up to 14 [4] (C) clamping hub diameter	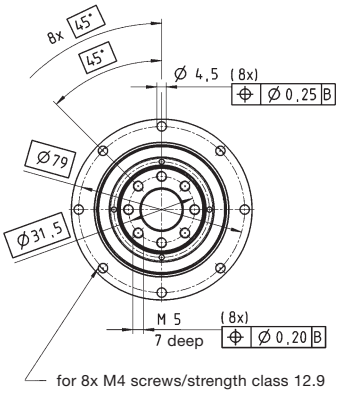	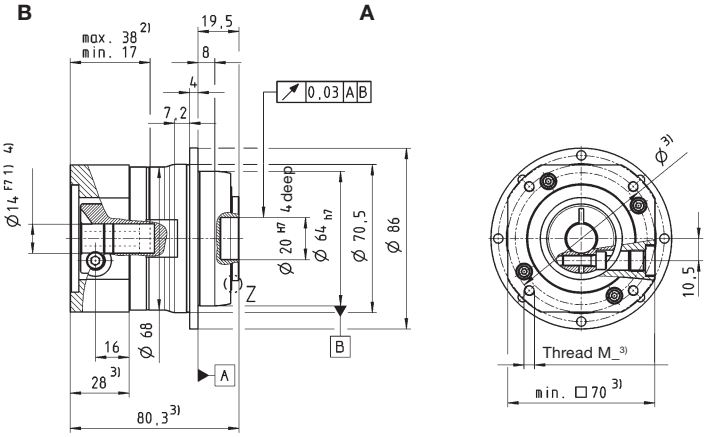
up to 19 [4] (E) clamping hub diameter	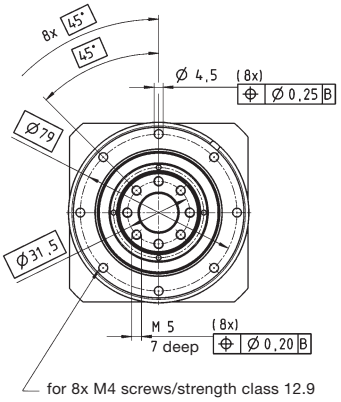	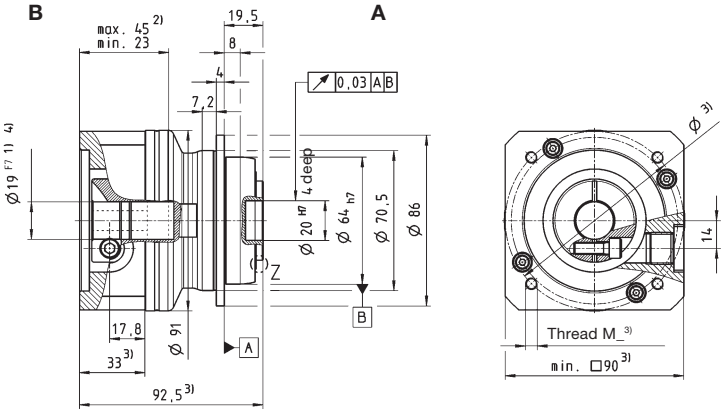

Z: Detail

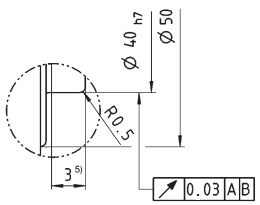

Non-tolerated dimensions ±1 mm

1) Check motor shaft fit.
2) Min./Max. permissible motor shaft length. Longer motor shafts are adaptable, please contact us.
3) The dimensions depend on the motor.
4) Smaller motor shaft diameter is compensated by a bushing with a minimum thickness of 1 mm.
5) Fit length

⚠ Motor mounting according to operating manual

				2-stage												
Ratio [a]			*i*	**16**	**20**	**21**	**25**	**28**	**31**	**35**	**40**	**50**	**61**	**70**	**91**	**100**
Max. acceleration torque (max. 1000 cycles per hour)			T_{2B} Nm	50	50	40	50	50	40	50	50	50	45	50	32	35
			in.lb	443	443	354	443	443	354	443	443	443	398	443	283	310
Nominal output torque (with n_{1N})			T_{2N} Nm	40	40	30	40	40	30	40	40	40	30	40	15	18
			in.lb	354	354	266	354	354	266	354	354	354	266	354	133	159
Emergency stop torque (permitted 1000 times during the service life of the gearhead)			T_{2Not} Nm	100	100	100	100	100	100	100	100	100	100	100	100	100
			in.lb	885	885	885	885	885	885	885	885	885	885	885	885	885
Nominal input speed (with T_{2N} and 20°C ambient temperature) [b]			n_{1N} rpm	4000	4000	4000	4000	4000	4000	4000	4000	4800	5500	5500	5500	5500
Max. input speed			n_{1Max} rpm	6000	6000	6000	6000	6000	6000	6000	6000	6000	6000	6000	6000	6000
Mean no load running torque (with n_1 = 3000 rpm and 20°C gearhead temperature) [c]			T_{012} Nm	0.55	0.45	0.45	0.45	0.35	0.35	0.30	0.25	0.25	0.20	0.20	0.20	0.20
			in.lb	4.87	3.98	3.98	3.98	3.10	3.10	2.66	2.21	2.21	1.77	1.77	1.77	1.77
Max. torsional backlash			j_t arcmin	Standard ≤ 4 / Reduced ≤ 2												
Torsional rigidity [c]			C_{t12} Nm/ arcmin	12	12	10	12	12	9	12	11	12	9	11	7	8
			in.lb/ arcmin	106	106	89	106	106	80	106	97	106	80	97	62	71
Tilting rigidity			C_{2K} Nm/ arcmin	–												
			in.lb/ arcmin													
Max. axial force [d]			F_{2AMax} N	1630												
			lb_f	367												
Max. tilting moment			M_{2KMax} Nm	110												
			in.lb	974												
Efficiency at full load			η %	94												
Service life (For calculation, see the Chapter "Information")			L_h h	> 20000												
Weight incl. standard adapter plate			*m* kg	1.5												
			lb_m	3.3												
Operating noise (with n_1 = 3000 rpm no load)			L_{PA} dB(A)	≤ 58												
Max. permitted housing temperature			°C	+90												
			F	194												
Ambient temperature			°C	0 to +40												
			F	32 to 104												
Lubrication				Lubricated for life												
Paint				Blue RAL 5002												
Direction of rotation				Motor and gearhead same direction												
Protection class				IP 65												
Moment of inertia (relates to the drive) Clamping hub diameter [mm]	B	11	J_1 kgcm²	0.078	0.070	0.074	0.068	0.062	0.072	0.061	0.051	0.057	0.058	0.056	0.057	0.056
			10^{-3} in.lb.s²	0.069	0.062	0.066	0.060	0.054	0.064	0.054	0.051	0.050	0.051	0.050	0.051	0.050
	C	14	J_1 kgcm²	0.17	0.17	0.17	0.16	0.16	0.17	0.16	0.15	0.15	0.15	0.15	0.15	0.15
			10^{-3} in.lb.s²	0.15	0.15	0.15	0.14	0.14	0.15	0.14	0.14	0.13	0.13	0.13	0.13	0.13

[a] Other ratios available on request
[b] For higher ambient temperatures, please reduce input speed
[c] Valid for clamping hub diameter of 11 mm
[d] Refers to center of the output shaft or flange

View A | View B

Motor shaft diameter [mm]

up to 11 [4] (B) clamping hub diameter

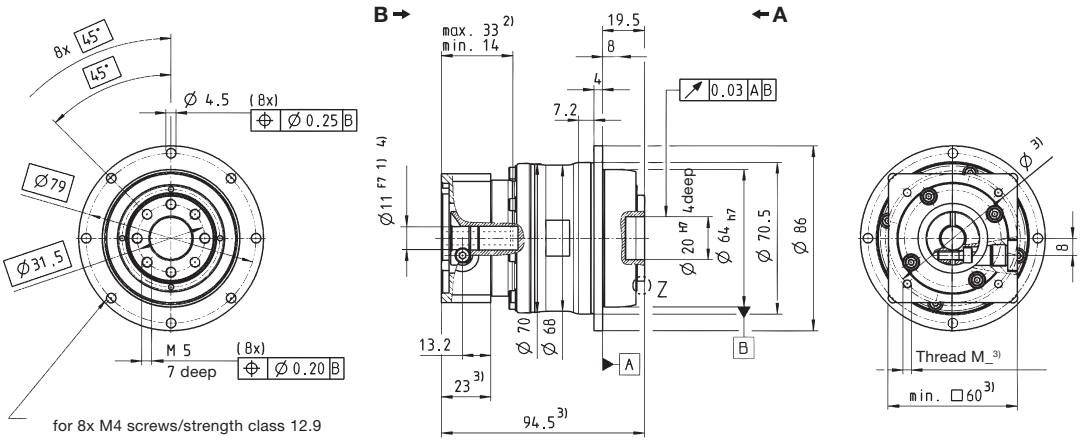

up to 14 [4] (C) clamping hub diameter

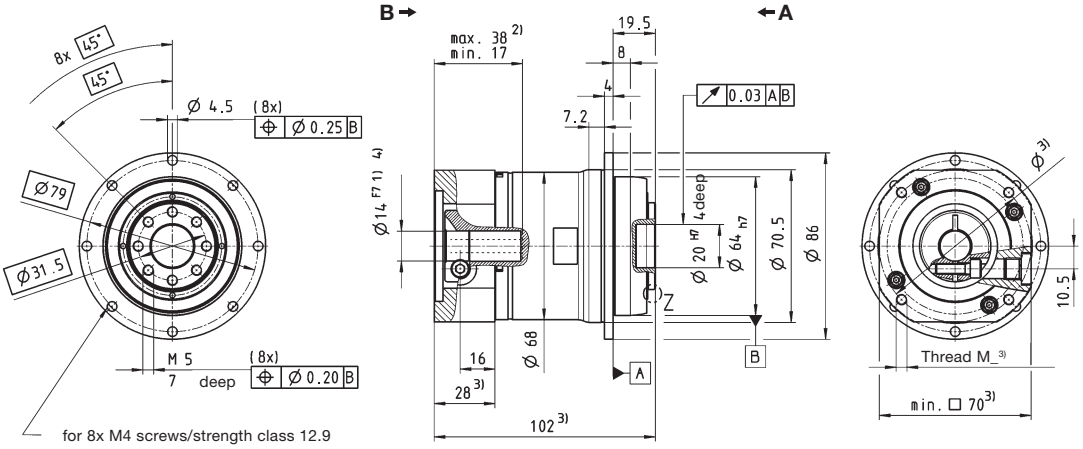

Z: Detail

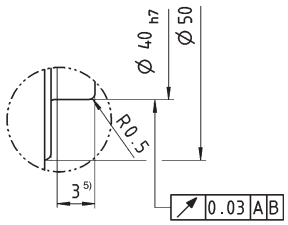

Non-tolerated dimensions ±1 mm

1) Check motor shaft fit.
2) Min./Max. permissible motor shaft length. Longer motor shafts are adaptable, please contact us.
3) The dimensions depend on the motor.
4) Smaller motor shaft diameter is compensated by a bushing with a minimum thickness of 1 mm.
5) Fit length

⚠ Motor mounting according to operating manual

				1-stage			
Ratio [a]			***i***	**4**	**5**	**7**	**10**
Max. acceleration torque (max. 1000 cycles per hour)			T_{2B} Nm	130	130	130	100
			T_{2B} in.lb	1151	1151	1151	885
Nominal output torque (with n_{1N})			T_{2N} Nm	75	75	75	60
			T_{2N} in.lb	664	664	664	531
Emergency stop torque (permitted 1000 times during the service life of the gearhead)			T_{2Not} Nm	250	250	250	250
			T_{2Not} in.lb	2213	2213	2213	2213
Nominal input speed (with T_{2N} and 20°C ambient temperature) [b]			n_{1N} rpm	2600	2900	3100	3100
Max. input speed			n_{1Max} rpm	6000	6000	6000	6000
Mean no load running torque (with n_1=3000 rpm and 20°C gearhead temperature) [c]			T_{012} Nm	1.6	1.3	1.0	0.7
			T_{012} in.lb	14.2	11.5	8.85	6.20
Max. torsional backlash			j_t arcmin	Standard ≤ 3 / Reduced ≤ 1			
Torsional rigidity [c]			C_{t12} Nm/ arcmin	32	33	30	23
			C_{t12} in.lb/ arcmin	283	292	266	204
Tilting rigidity			C_{2K} Nm/ arcmin	225			
			C_{2K} in.lb/ arcmin	1991			
Max. axial force [d]			F_{2AMax} N	2150			
			F_{2AMax} lb_f	484			
Max. tilting moment			M_{2KMax} Nm	270			
			M_{2KMax} in.lb	2390			
Efficiency at full load			η %	97			
Service life (For calculation, see the Chapter "Information")			L_h h	> 20000			
Weight incl. standard adapter plate			m kg	3.8			
			m lb_m	8.4			
Operating noise (with n_1=3000 rpm no load)			L_{PA} dB(A)	≤ 60			
Max. permitted housing temperature			°C	+90			
			F	194			
Ambient temperature			°C	0 to +40			
			F	32 to 104			
Lubrication				Lubricated for life			
Paint				Blue RAL 5002			
Direction of rotation				Motor and gearhead same direction			
Protection class				IP 65			
Moment of inertia (relates to the drive)	C	14	J_1 kgcm²	0.78	0.62	0.48	0.40
			J_1 10^{-3} in.lb.s²	0.69	0.55	0.42	0.35
Clamping hub diameter [mm]	E	19	J_1 kgcm²	0.95	0.79	0.64	0.57
			J_1 10^{-3} in.lb.s²	0.84	0.70	0.57	0.50
	G	24	J_1 kgcm²	2.32	2.16	2.02	1.94
			J_1 10^{-3} in.lb.s²	2.05	1.91	1.78	1.72

[a] Other ratios available on request
[b] For higher ambient temperatures, please reduce input speed
[c] Valid for clamping hub diameter of 19 mm
[d] Refers to center of the output shaft or flange

Motor shaft diameter [mm]

	View A	View B
up to 14 [4] (C) clamping hub diameter	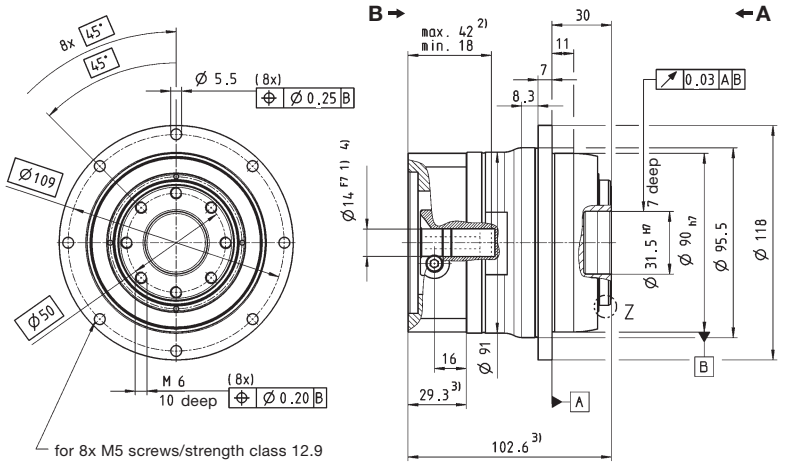	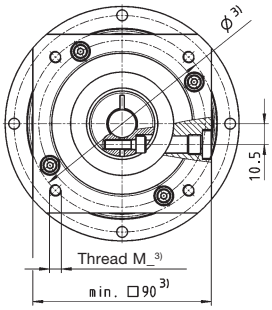
up to 19 [4] (E) clamping hub diameter	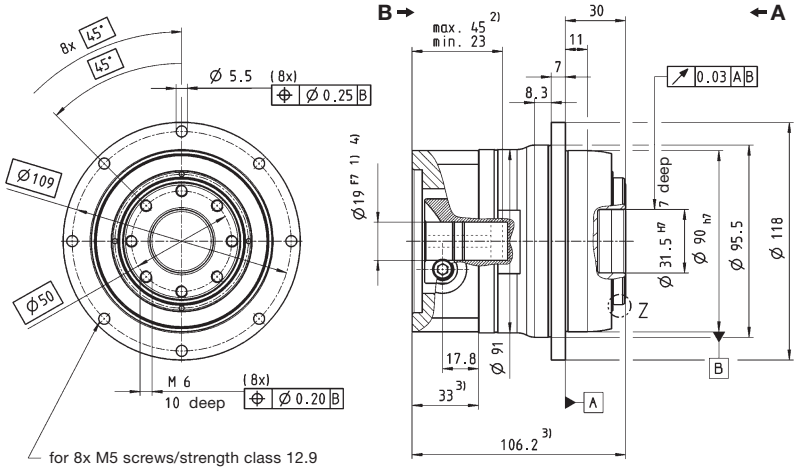	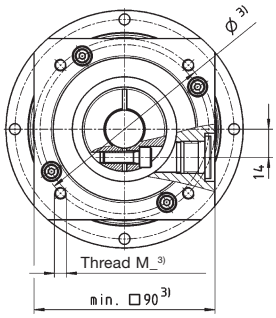
up to 24 [4] (G) clamping hub diameter	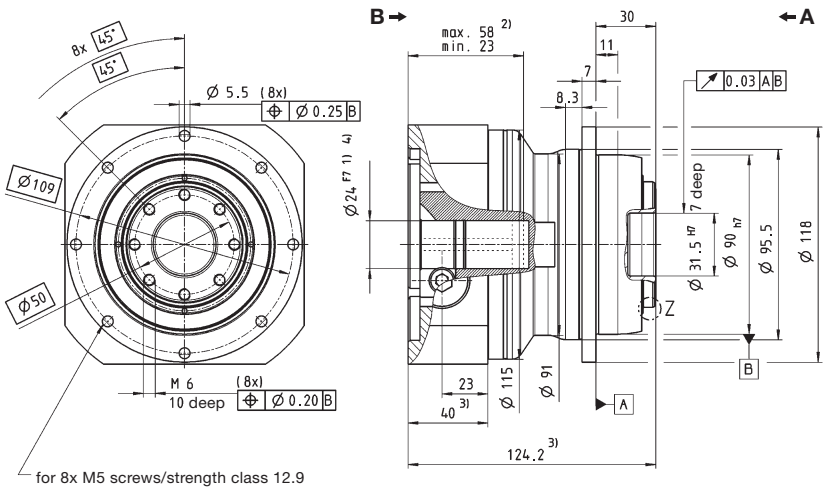	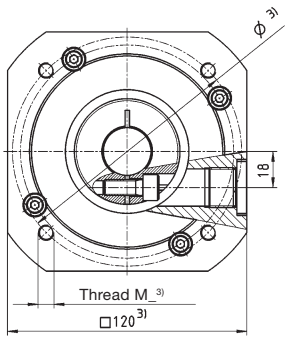

Z: Detail

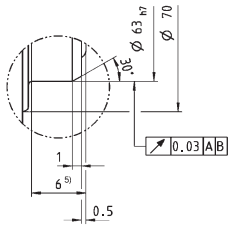

Non-tolerated dimensions ±1 mm

1) Check motor shaft fit.
2) Min./Max. permissible motor shaft length. Longer motor shafts are adaptable, please contact us.
3) The dimensions depend on the motor.
4) Smaller motor shaft diameter is compensated by a bushing with a minimum thickness of 1 mm.
5) Fit length

⚠ Motor mounting according to operating manual

				2-stage												
Ratio [a]			*i*	**16**	**20**	**21**	**25**	**28**	**31**	**35**	**40**	**50**	**61**	**70**	**91**	**100**
Max. acceleration torque (max. 1000 cycles per hour)			T_{2B} Nm	130	130	100	130	130	110	130	130	130	110	130	80	100
			in.lb	1151	1151	885	1151	1151	974	1151	1151	1151	974	1151	708	885
Nominal output torque (with n_{1N})			T_{2N} Nm	90	90	80	90	90	70	90	80	90	70	90	35	60
			in.lb	797	797	708	797	797	620	797	708	797	620	797	310	531
Emergency stop torque (permitted 1000 times during the service life of the gearhead)			T_{2Not} Nm	250	250	250	250	250	250	250	250	250	250	250	250	250
			in.lb	2213	2213	2213	2213	2213	2213	2213	2213	2213	2213	2213	2213	2213
Nominal input speed (with T_{2N} and 20°C ambient temperature) [b]			n_{1N} rpm	3500	3500	3500	3500	3500	3500	3500	3500	3800	4500	4500	4500	4500
Max. input speed			n_{1Max} rpm	6000	6000	6000	6000	6000	6000	6000	6000	6000	6000	6000	6000	6000
Mean no load running torque (with n_1=3000 rpm and 20°C gearhead temperature) [c]			T_{012} Nm	0.90	0.75	0.70	0.65	0.55	0.50	0.50	0.40	0.35	0.35	0.35	0.30	0.30
			in.lb	7.97	6.64	6.20	5.75	4.87	4.43	4.43	3.54	3.10	3.10	3.10	2.66	2.66
Max. torsional backlash			j_t arcmin	Standard ≤ 3 / Reduced ≤ 1												
Torsional rigidity [c]			C_{t12} Nm/ arcmin	32	32	26	32	31	24	32	30	30	24	28	21	22
			in.lb/ arcmin	283	283	230	283	274	212	283	266	266	212	248	186	195
Tilting rigidity			C_{2K} Nm/ arcmin	225												
			in.lb/ arcmin	1991												
Max. axial force [d]			F_{2AMax} N	2150												
			lb_f	484												
Max. tilting moment			M_{2KMax} Nm	270												
			in.lb	2390												
Efficiency at full load			η %	94												
Service life (For calculation, see the Chapter "Information")			L_h h	> 20000												
Weight incl. standard adapter plate			*m* kg	3.6												
			lb_m	8.0												
Operating noise (with n_1=3000 rpm no load)			L_{PA} dB(A)	≤ 62												
Max. permitted housing temperature			°C	+90												
			F	194												
Ambient temperature			°C	0 to +40												
			F	32 to 104												
Lubrication				Lubricated for life												
Paint				Blue RAL 5002												
Direction of rotation				Motor and gearhead same direction												
Protection class				IP 65												
Moment of inertia (relates to the drive)	B	11	J_1 kgcm²	0.17	0.14	0.15	0.13	0.11	0.13	0.10	0.09	0.09	0.09	0.09	0.09	0.09
			10^{-3} in.lb.s²	0.15	0.12	0.13	0.12	0.10	0.12	0.09	0.08	0.08	0.08	0.08	0.08	0.08
Clamping hub diameter [mm]	C	14	J_1 kgcm²	0.24	0.21	0.22	0.20	0.18	0.21	0.18	0.17	0.17	0.17	0.16	0.16	0.16
			10^{-3} in.lb.s²	0.21	0.19	0.19	0.19	0.16	0.18	0.16	0.15	0.15	0.15	0.14	0.15	0.14
	E	19	J_1 kgcm²	0.56	0.53	0.55	0.53	0.51	0.53	0.50	0.49	0.49	0.49	0.49	0.49	0.49
			10^{-3} in.lb.s²	0.50	0.47	0.49	0.47	0.45	0.47	0.44	0.43	0.43	0.43	0.43	0.43	0.43

[a] Other ratios available on request
[b] For higher ambient temperatures, please reduce input speed
[c] Valid for clamping hub diameter of 14 mm
[d] Refers to center of the output shaft or flange

Motor shaft diameter [mm]

	View A	View B
up to 11 [4] (B) clamping hub diameter	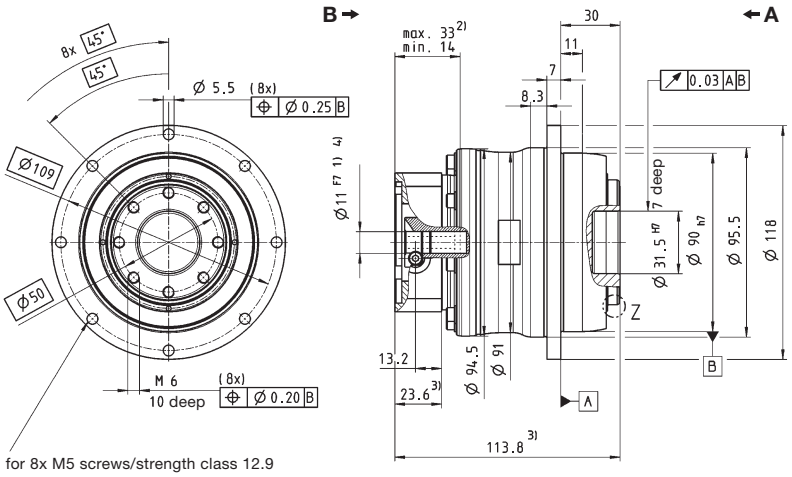	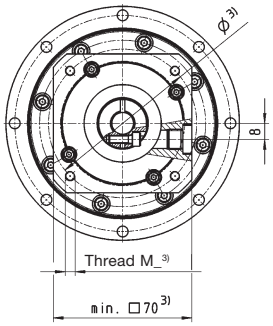
up to 14 [4] (C) clamping hub diameter	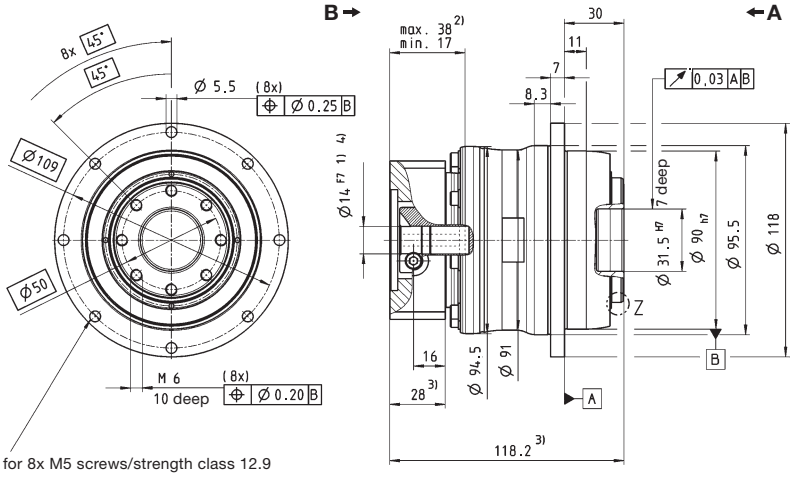	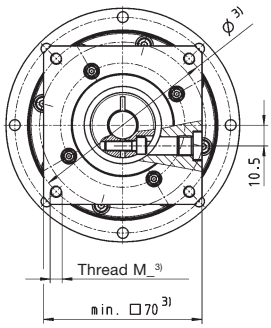
up to 19 [4] (E) clamping hub diameter	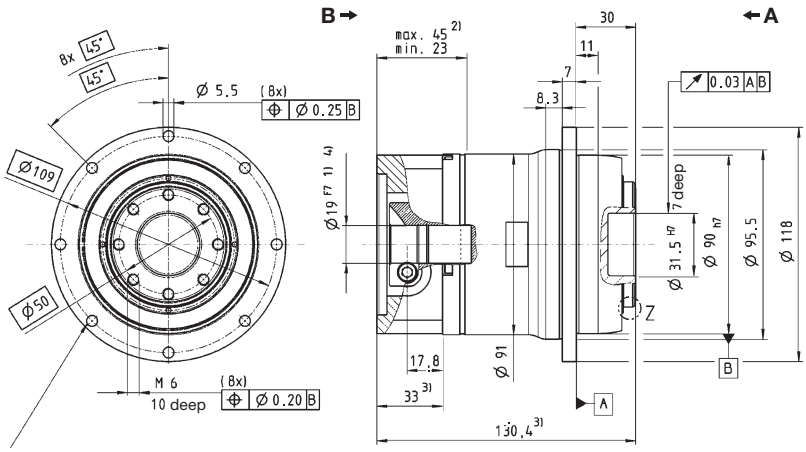	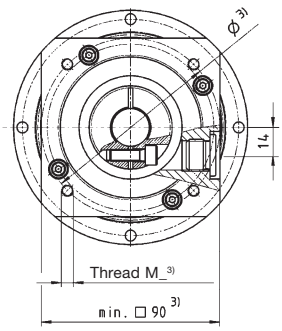

Z: Detail

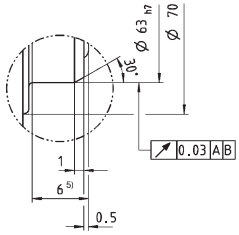

Non-tolerated dimensions ±1 mm

1) Check motor shaft fit.
2) Min./Max. permissible motor shaft length. Longer motor shafts are adaptable, please contact us.
3) The dimensions depend on the motor.
4) Smaller motor shaft diameter is compensated by a bushing with a minimum thickness of 1 mm.
5) Fit length

⚠ Motor mounting according to operating manual

					2-stage				3-stage			
Ratio [a]			i		**22**	**27.5**	**38.5**	**55**	**88**	**110**	**154**	**220**
Max. acceleration torque (max. 1000 cycles per hour)			T_{2B}	Nm	230	230	230	230	230	230	230	230
				in.lb	2036	2036	2036	2036	2036	2036	2036	2036
Nominal output torque (with n_{1N})			T_{2N}	Nm	150	150	180	110	180	180	180	180
				in.lb	1328	1328	1593	974	1593	1593	1593	1593
Emergency stop torque (permitted 1000 times during the service life of the gearhead)			T_{2Not}	Nm	525	525	525	525	525	525	525	525
				in.lb	4646	4646	4646	4646	4646	4646	4646	4646
Nominal input speed (with T_{2N} and 20°C ambient temperature) [b]			n_{1N}	rpm	4000	4000	4000	4000	4500	4500	4500	4500
Max. input speed			n_{1Max}	rpm	6000	6000	6000	6000	6000	6000	6000	6000
Mean no load running torque (with n_1=3000 rpm and 20°C gearhead temperature) [c]			T_{012}	Nm	0.42	–	–	–	–	0.23	–	–
				in.lb	3.72					2.04		
Max. torsional backlash			j_t	arcmin	≤ 1				≤ 1			
Torsional rigidity [c]			C_{t12}	Nm/ arcmin	43	43	43	42	42	42	42	42
				in.lb/ arcmin	381	381	381	372	372	372	372	372
Tilting rigidity			C_{2K}	Nm/ arcmin	225				225			
				in.lb/ arcmin	1991				1991			
Max. axial force [d]			F_{2AMax}	N	2150				2150			
				lb_f	484				484			
Max. tilting moment			M_{2KMax}	Nm	400				400			
				in.lb	3540				3540			
Efficiency at full load			η	%	94				92			
Service life (For calculation, see the Chapter "Information")			L_h	h	> 20000				> 20000			
Weight incl. standard adapter plate			m	kg	3.2				3.6			
				lb_m	7.1				8.0			
Operating noise (with n_1=3000 rpm no load)			L_{PA}	dB(A)	≤ 60				≤ 60			
Max. permitted housing temperature				°C	+90							
				F	194							
Ambient temperature				°C	0 to +40							
				F	32 to 104							
Lubrication					Lubricated for life							
Paint					Blue RAL 5002							
Direction of rotation					Motor and gearhead same direction							
Protection class					IP 65							
Moment of inertia (relates to the drive)	C	14	J_1	kgcm²	0.21	0.18	0.16	0.14	0.16	0.15	0.14	0.13
				10^{-3} in.lb.s²	0.19	0.16	0.14	0.12	0.14	0.13	0.12	0.12
Clamping hub diameter [mm]	E	19	J_1	kgcm²	0.52	0.50	0.47	0.46	–	–	–	–
				10^{-3} in.lb.s²	0.46	0.44	0.42	0.41				

[a] Other ratios available on request
[b] For higher ambient temperatures, please reduce input speed
[c] Valid for clamping hub diameter of 14 mm
[d] Refers to center of the output shaft or flange

View A | View B

Motor shaft diameter [mm]

2-stage:

up to 14 [4] (C) clamping hub diameter

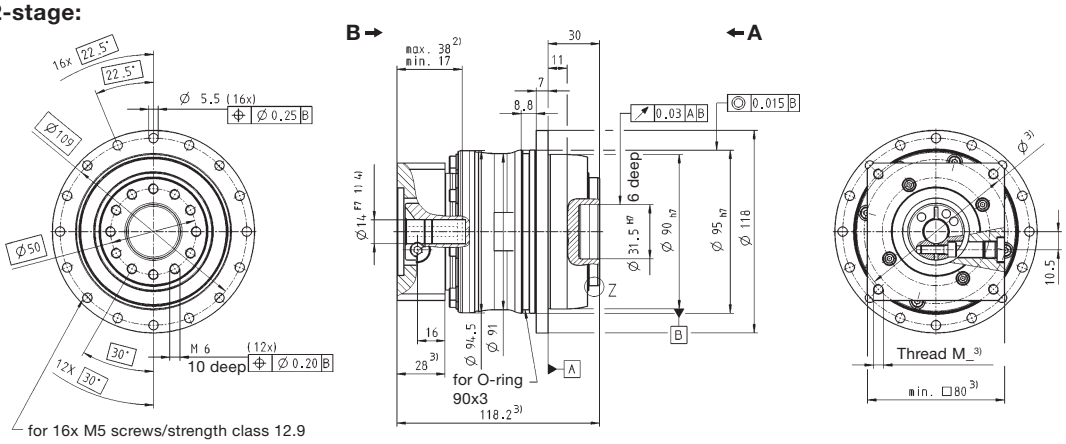

up to 19 [4] (E) clamping hub diameter

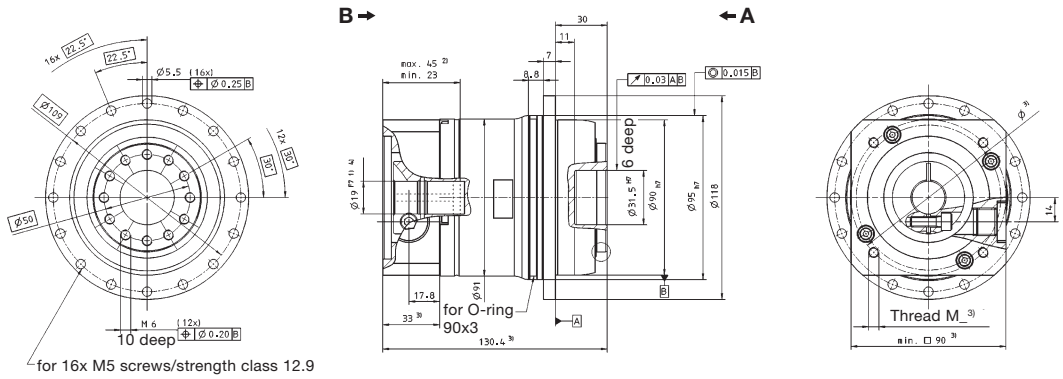

3-stage:

up to 14 [4] (C) clamping hub diameter

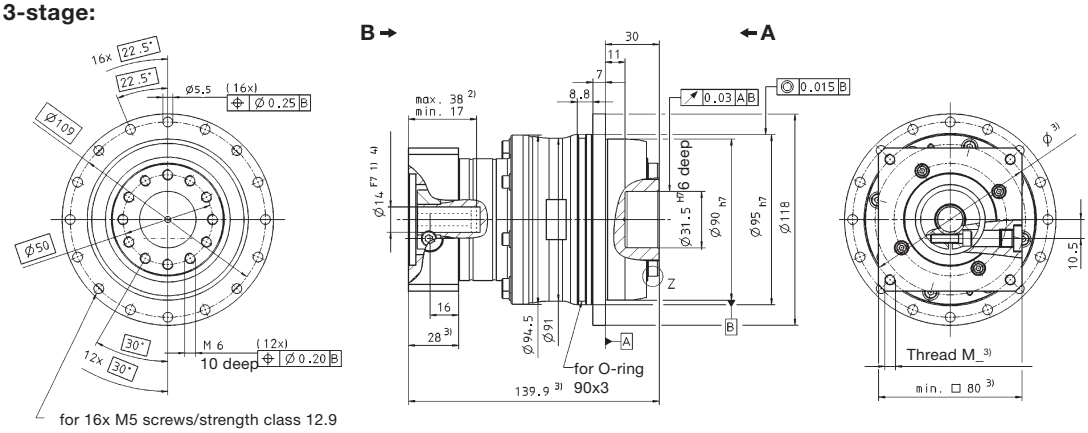

Z: Detail

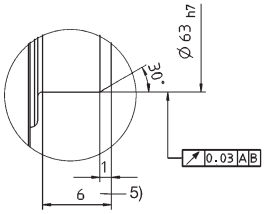

Non-tolerated dimensions ±1 mm

1) Check motor shaft fit.
2) Min./Max. permissible motor shaft length. Longer motor shafts are adaptable, please contact us.
3) The dimensions depend on the motor.
4) Smaller motor shaft diameter is compensated by a bushing with a minimum thickness of 1 mm.
5) Fit length

⚠ Motor mounting according to operating manual

					1-stage			
Ratio [a]			i		**4**	**5**	**7**	**10**
Max. acceleration torque (max. 1000 cycles per hour)			T_{2B}	Nm	350	380	330	265
				in.lb	3098	3363	2921	2345
Nominal output torque (with n_{1N})			T_{2N}	Nm	170	170	170	120
				in.lb	1505	1505	1505	1062
Emergency stop torque (permitted 1000 times during the service life of the gearhead)			T_{2Not}	Nm	625	625	625	625
				in.lb	5531	5531	5531	5531
Nominal input speed (with T_{2N} and 20°C ambient temperature) [b]			n_{1N}	rpm	2300	2500	2500	2500
Max. input speed			n_{1Max}	rpm	4500	4500	4500	4500
Mean no load running torque (with n_1=3000 rpm and 20°C gearhead temperature) [c]			T_{012}	Nm	3.3	2.7	2.0	1.4
				in.lb	29.2	23.9	17.7	12.4
Max. torsional backlash			j_t	arcmin	Standard ≤ 3 / Reduced ≤ 1			
Torsional rigidity [c]			C_{t12}	Nm/ arcmin	80	86	76	62
				in.lb/ arcmin	708	761	673	549
Tilting rigidity			C_{2K}	Nm/ arcmin	550			
				in.lb/ arcmin	4868			
Max. axial force [d]			F_{2AMax}	N	4150			
				lb_f	934			
Max. tilting moment			M_{2KMax}	Nm	440			
				in.lb	3894			
Efficiency at full load			η	%	97			
Service life (For calculation, see the Chapter "Information")			L_h	h	> 20000			
Weight incl. standard adapter plate			m	kg	6.5			
				lb_m	14.4			
Operating noise (with n_1=3000 rpm no load i = 10)			L_{PA}	dB(A)	≤ 64			
Max. permitted housing temperature				°C	+90			
				F	194			
Ambient temperature				°C	0 to +40			
				F	32 to 104			
Lubrication					Lubricated for life			
Paint					Blue RAL 5002			
Direction of rotation					Motor and gearhead same direction			
Protection class					IP 65			
Moment of inertia (relates to the drive) Clamping hub diameter [mm]	E	19	J_1	kgcm²	2.59	2.11	1.69	1.45
				10^{-3} in.lb.s²	2.29	1.87	1.50	1.28
	G	24	J_1	kgcm²	3.28	2.80	2.38	2.14
				10^{-3} in.lb.s²	2.90	2.48	2.11	1.89
	H	28	J_1	kgcm²	2.76	2.36	1.98	1.74
				10^{-3} in.lb.s²	2.44	2.09	1.75	1.54
	K	38	J_1	kgcm²	10.3	9.87	9.45	9.21
				10^{-3} in.lb.s²	9.11	8.73	8.36	8.15

[a] Other ratios available on request
[b] For higher ambient temperatures, please reduce input speed
[c] Valid for clamping hub diameter of 24 and 28 mm
[d] Refers to center of the output shaft or flange

Motor shaft diameter [mm]

	View A	View B
up to 19 [4] (E) clamping hub diameter	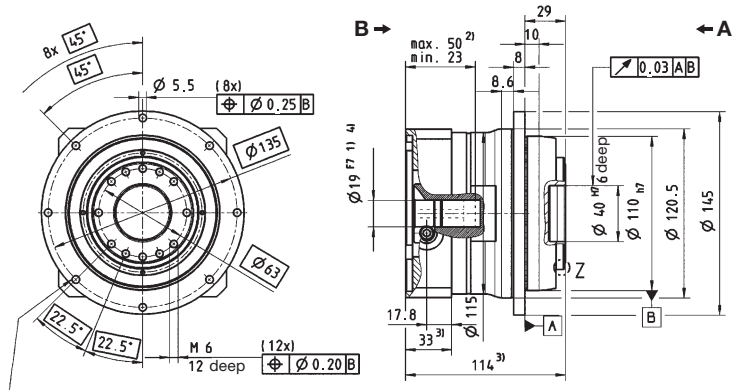 for 8x M5 screws/strength class 12.9	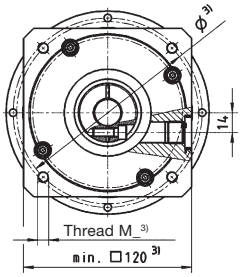
up to 24/28 [4] (G/H) clamping hub diameter	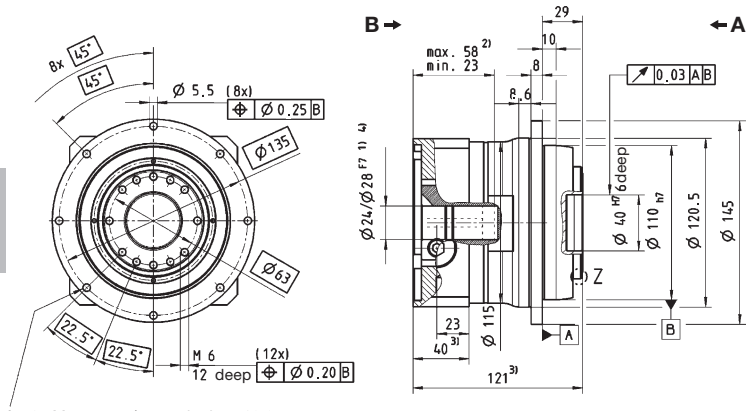 for 8x M5 screws/strength class 12.9	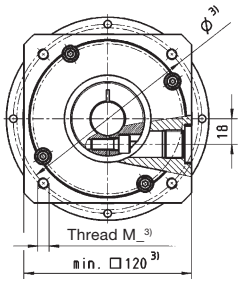
up to 38 [4] (K) clamping hub diameter	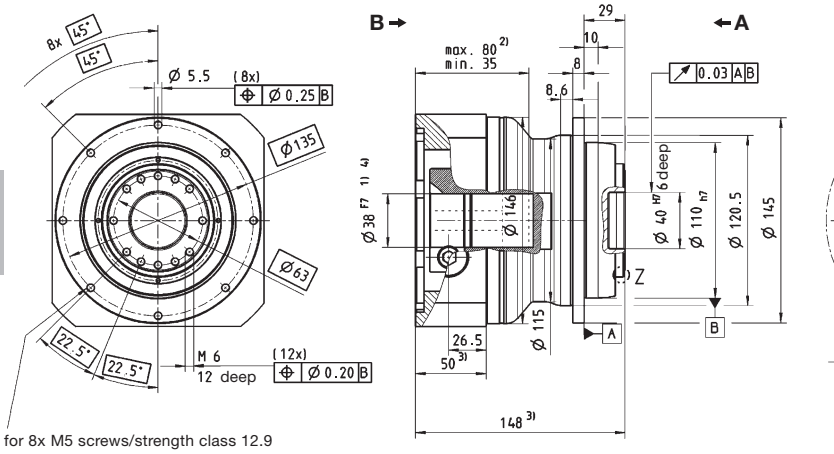 for 8x M5 screws/strength class 12.9	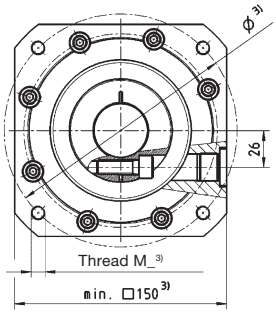

Z: Detail

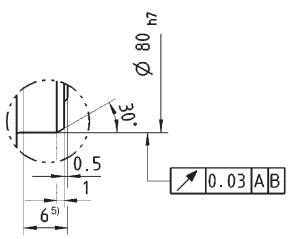

Non-tolerated dimensions ±1 mm

1) Check motor shaft fit.
2) Min./Max. permissible motor shaft length. Longer motor shafts are adaptable, please contact us.
3) The dimensions depend on the motor.
4) Smaller motor shaft diameter is compensated by a bushing with a minimum thickness of 1 mm.
5) Fit length

⚠ Motor mounting according to operating manual

					2-stage												
Ratio [a]			i		**16**	**20**	**21**	**25**	**28**	**31**	**35**	**40**	**50**	**61**	**70**	**91**	**100**
Max. acceleration torque (max. 1000 cycles per hour)			T_{2B}	Nm	350	350	300	380	350	300	380	350	380	280	330	250	265
				in.lb	3098	3098	2655	3363	2098	2655	3363	3098	3363	2478	2921	2213	2345
Nominal output torque (with n_{1N})			T_{2N}	Nm	200	210	170	200	210	190	220	200	220	170	200	100	120
				in.lb	1770	1859	1505	1770	1859	1682	1947	1770	1947	1505	1770	885	1062
Emergency stop torque (permitted 1000 times during the service life of the gearhead)			T_{2Not}	Nm	625	625	625	625	625	625	625	625	625	625	625	625	625
				in.lb	5531	5531	5531	5531	5531	5531	5531	5531	5531	5531	5531	5531	5531
Nominal input speed (with T_{2N} and 20°C ambient temperature) [b]			n_{1N}	rpm	2800	2800	2800	2800	2800	2800	2800	2800	3100	3500	3500	4200	4200
Max. input speed			n_{1Max}	rpm	6000	6000	6000	6000	6000	6000	6000	6000	6000	6000	6000	6000	6000
Mean no load running torque (with n_1=3000 rpm and 20°C gearhead temperature) [c]			T_{012}	Nm	1.8	1.5	1.4	1.4	1.1	1.1	1.0	0.8	0.8	0.7	0.7	0.6	0.6
				in.lb	15.9	13.3	12.4	12.4	9.7	9.7	8.9	7.1	7.1	6.2	6.2	5.3	5.3
Max. torsional backlash			j_t	arcmin	Standard ≤ 3 / Reduced ≤ 1												
Torsional rigidity [c]			C_{t12}	Nm/ arcmin	81	81	70	83	80	54	82	76	80	61	71	55	60
				in.lb/ arcmin	717	717	620	735	708	478	726	673	708	540	628	487	531
Tilting rigidity			C_{2K}	Nm/ arcmin	550												
				in.lb/ arcmin	4867												
Max. axial force [d]			F_{2AMax}	N	4150												
				lb_f	934												
Max. tilting moment			M_{2KMax}	Nm	440												
				in.lb	3894												
Efficiency at full load			η	%	94												
Service life (For calculation, see the Chapter "Information")			L_h	h	> 20000												
Weight incl. standard adapter plate			m	kg	6.7												
				lb_m	14.8												
Operating noise (with n_1=3000 rpm no load)			L_{PA}	dB(A)	≤ 64												
Max. permitted housing temperature				°C	+90												
				F	194												
Ambient temperature				°C	0 to +40												
				F	32 to 104												
Lubrication					Lubricated for life												
Paint					Blue RAL 5002												
Direction of rotation					Motor and gearhead same direction												
Protection class					IP 65												
Moment of inertia (relates to the drive)	C	14	J_1	kgcm²	0.66	0.55	0.60	0.53	0.44	0.55	0.43	0.38	0.38	0.39	0.37	0.38	0.37
				10^{-3} in.lb.s²	0.59	0.49	0.51	0.47	0.39	0.49	0.38	0.34	0.33	0.35	0.33	0.34	0.33
Clamping hub diameter [mm]	E	19	J_1	kgcm²	0.83	0.71	0.77	0.69	0.61	0.72	0.60	0.55	0.54	0.55	0.54	0.54	0.54
				10^{-3} in.lb.s²	0.73	0.63	0.68	0.61	0.54	0.64	0.53	0.49	0.48	0.4	0.48	0.48	0.48
	G	24	J_1	kgcm²	2.20	2.08	2.14	2.06	1.98	2.09	1.97	1.92	1.92	1.92	1.91	1.92	1.91
				10^{-3} in.lb.s²	1.95	1.84	1.89	1.82	1.75	1.85	1.74	1.70	1.70	1.70	1.69	1.70	1.69

[a] Other ratios available on request
[b] For higher ambient temperatures, please reduce input speed
[c] Valid for clamping hub diameter of 19 mm
[d] Refers to center of the output shaft or flange

View A | View B

Motor shaft diameter [mm]

up to 14 [4] (C) clamping hub diameter

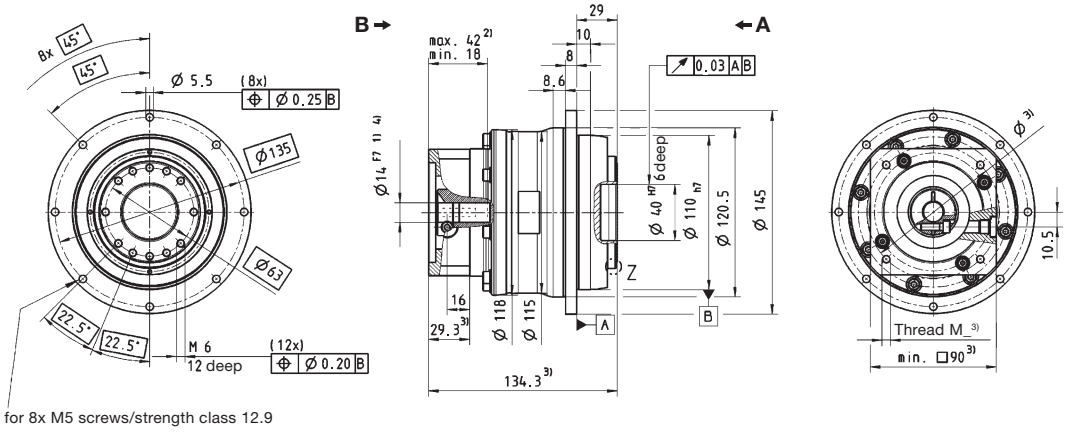

for 8x M5 screws/strength class 12.9

up to 19 [4] (E) clamping hub diameter

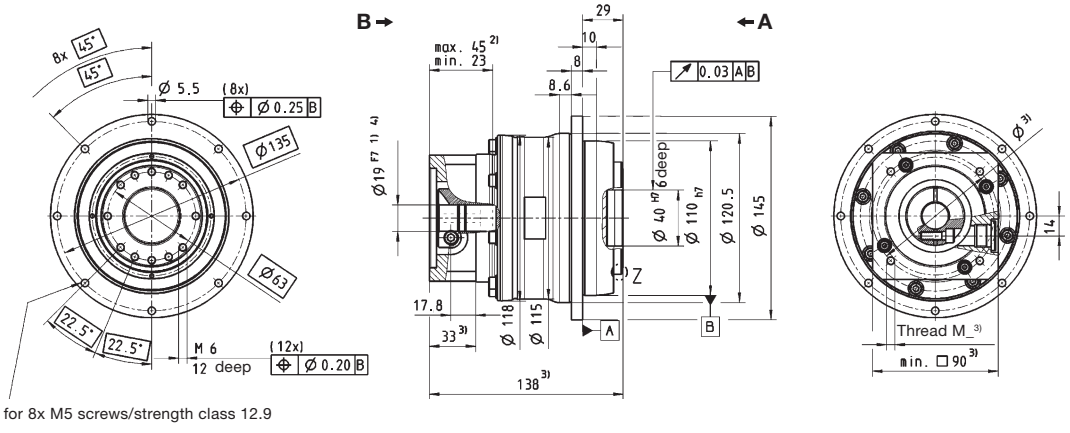

for 8x M5 screws/strength class 12.9

up to 24 [4] (G) clamping hub diameter

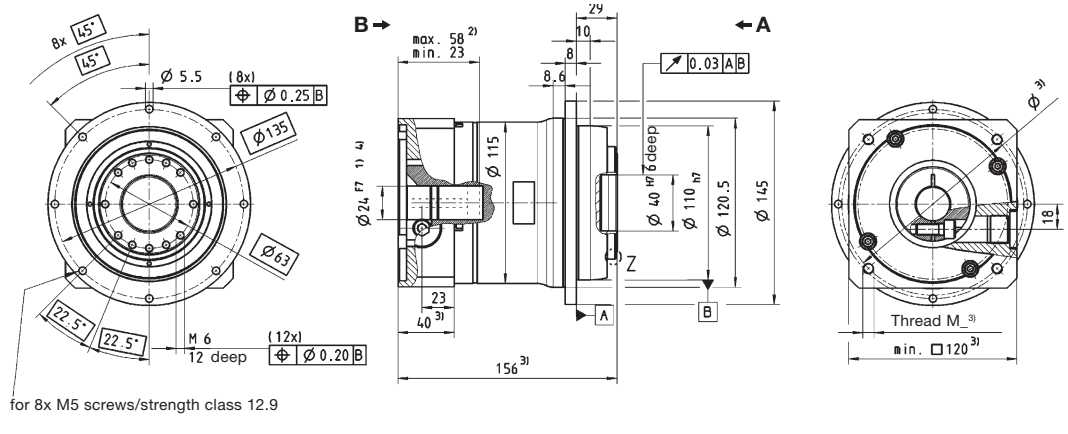

for 8x M5 screws/strength class 12.9

Z: Detail

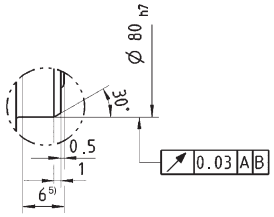

Non-tolerated dimensions ±1 mm

1) Check motor shaft fit.
2) Min./Max. permissible motor shaft length. Longer motor shafts are adaptable, please contact us.
3) The dimensions depend on the motor.
4) Smaller motor shaft diameter is compensated by a bushing with a minimum thickness of 1 mm.
5) Fit length

⚠ Motor mounting according to operating manual

					2-stage				3-stage				
Ratio			i		**22**	**27.5**	**38.5**	**55**	**66**	**88**	**110**	**154**	**220**
Max. acceleration torque (max. 1000 cycles per hour)			T_{2B}	Nm	530	530	530	530	480	480	480	480	480
				in.lb	4691	4691	4691	4691	4248	4248	4248	4248	4248
Nominal output torque (with n_{1N})			T_{2N}	Nm	320	350	375	375	260	260	260	260	260
				in.lb	2832	3098	3319	3319	2301	2301	2301	2301	2301
Emergency stop torque (permitted 1000 times during the service life of the gearhead)			T_{2Not}	Nm	1200	1200	1200	1200	1200	1200	1200	1200	1200
				in.lb	10620	10620	10620	10620	10620	10620	10620	10620	10620
Nominal input speed (with T_{2N} and 20°C ambient temperature) [b]			n_{1N}	rpm	3500	3500	3500	3500	4000	4000	4000	4000	4000
Max. input speed			n_{1Max}	rpm	6000	6000	6000	6000	6000	6000	6000	6000	6000
Mean no load running torque (with n_1=3000 rpm and 20°C gearhead temperature) [c]			T_{012}	Nm	1.0	–	–	–	–	–	0.5	–	–
				in.lb	8.9						4.4		
Max. torsional backlash			j_t	arcmin	≤ 1				≤ 1				
Torsional rigidity [c]			C_{t21}	Nm/ arcmin	105	105	105	100	95	95	95	95	95
				in.lb/ arcmin	929	929	929	885	841	841	841	841	841
Tilting rigidity			C_{2K}	Nm/ arcmin	413				413				
				in.lb/ arcmin	3655				3655				
Max. axial force [d]			F_{2AMax}	N	4150				4150				
				lb_f	934				934				
Max. tilting moment			M_{2KMax}	Nm	550				550				
				in.lb	4868				4868				
Efficiency at full load			η	%	94				92				
Service life (For calculation, see the Chapter "Information")			L_h	h	> 20000				> 20000				
Weight incl. standard adapter plate			m	kg	5.6				6.1				
				lb_m	12.4				13.5				
Operating noise (with n_1=3000 rpm no load)			L_{PA}	dB(A)	≤ 62				≤ 62				
Max. permitted housing temperature				°C	+90								
				F	194								
Ambient temperature				°C	0 to +40								
				F	32 to 104								
Lubrication					Lubricated for life								
Paint					Blue RAL 5002								
Direction of rotation					Motor and gearhead same direction								
Protection class					IP 65								
Moment of inertia (relates to the drive)	E	19	J_1	kgcm²	0.87	0.70	0.60	0.55	0.63	0.56	0.53	0.51	0.50
				10^{-3} in.lb.s²	0.77	0.62	0.53	0.49	0.56	0.50	0.47	0.45	0.44
Clamping hub diameter [mm]	G	24	J_1	kgcm²	2.39	2.22	2.12	2.07	–	–	–	–	–
				10^{-3} in.lb.s²	2.12	1.96	1.88	1.83					

[b] For higher ambient temperatures, please reduce input speed
[c] Valid for clamping hub diameter of 19 mm
[d] Refers to center of the output shaft or flange

View A | View B

Motor shaft diameter [mm]

2-stage:

up to 19 [4] (E) clamping hub diameter

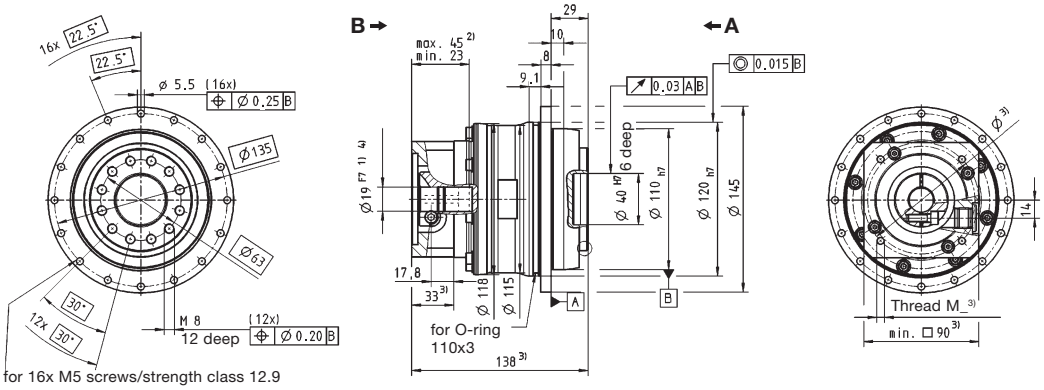

up to 24 [4] (G) clamping hub diameter

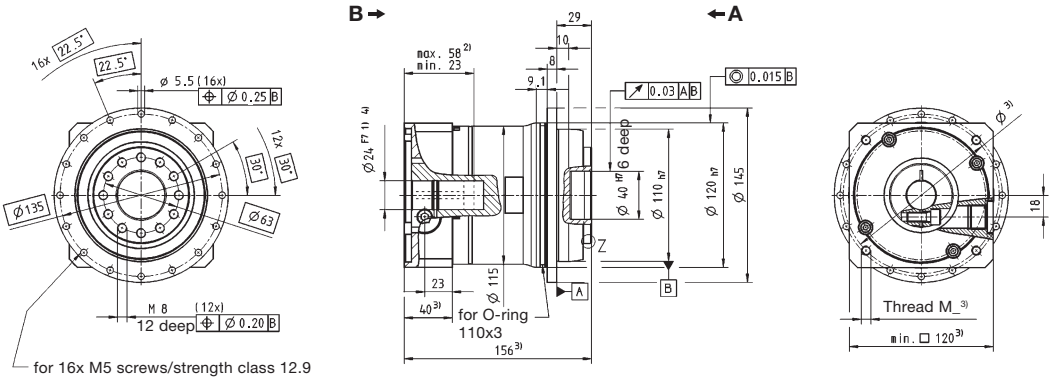

3-stage:

up to 19 [4] (E) clamping hub diameter

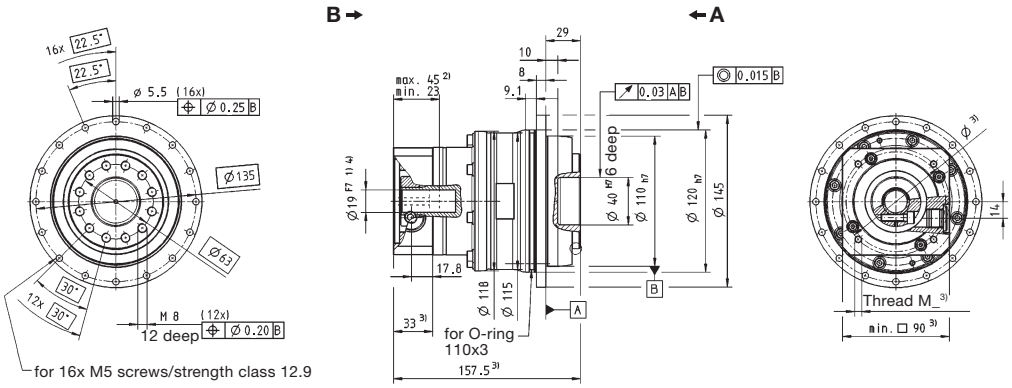

Z: Detail

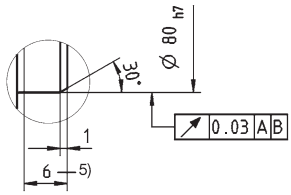

Non-tolerated dimensions ±1 mm

1) Check motor shaft fit.
2) Min./Max. permissible motor shaft length. Longer motor shafts are adaptable, please contact us.
3) The dimensions depend on the motor.
4) Smaller motor shaft diameter is compensated by a bushing with a minimum thickness of 1 mm.
5) Fit length

⚠ Motor mounting according to operating manual

				1-stage			
Ratio [a]			***i***	**4**	**5**	**7**	**10**
Max. acceleration torque (max. 1000 cycles per hour)			T_{2B} Nm	700	700	700	540
			T_{2B} in.lb	6195	6195	6195	4779
Nominal output torque (with n_{1N})			T_{2N} Nm	370	370	370	240
			T_{2N} in.lb	3275	3275	3275	2124
Emergency stop torque (permitted 1000 times during the service life of the gearhead)			T_{2Not} Nm	1250	1250	1250	1250
			T_{2Not} in.lb	11063	11063	11063	11063
Nominal input speed (with T_{2N} and 20°C ambient temperature) [b]			n_{1N} rpm	1900	2000	2500	2500
Max. input speed			n_{1Max} rpm	4000	4000	4000	4000
Mean no load running torque (with n_1=3000 rpm and 20°C gearhead temperature) [c]			T_{012} Nm	8.1	6.6	4.8	3.5
			T_{012} in.lb	71.7	58.4	42.5	31.0
Max. torsional backlash			j_t arcmin	Standard ≤ 3 / Reduced ≤ 1			
Torsional rigidity [c]			C_{t12} Nm/ arcmin	190	187	159	123
			C_{t12} in.lb/ arcmin	1682	1655	1407	1089
Tilting rigidity			C_{2K} Nm/ arcmin	560			
			C_{2K} in.lb/ arcmin	4956			
Max. axial force [d]			F_{2AMax} N	6130			
			F_{2AMax} lb_f	1379			
Max. tilting moment			M_{2KMax} Nm	1335			
			M_{2KMax} in.lb	11815			
Efficiency at full load			η %	97			
Service life (For calculation, see the Chapter "Information")			L_h h	> 20000			
Weight incl. standard adapter plate			m kg	14.0			
			m lb_m	30.9			
Operating noise (with n_1=3000 rpm no load)			L_{PA} dB(A)	≤ 66			
Max. permitted housing temperature			°C	+90			
			F	194			
Ambient temperature			°C	0 to +40			
			F	32 to 104			
Lubrication				Lubricated for life			
Paint				Blue RAL 5002			
Direction of rotation				Motor and gearhead same direction			
Protection class				IP 65			
Moment of inertia (relates to the drive) Clamping hub diameter [mm]	G	24	J_1 kgcm²	9.47	7.85	6.39	5.54
			J_1 10^{-3} in.lb.s²	8.38	6.95	5.66	4.90
	I	32	J_1 kgcm²	12.6	11.0	9.55	8.71
			J_1 10^{-3} in.lb.s²	11.1	9.74	8.45	7.70
	K	38	J_1 kgcm²	13.7	12.1	10.6	9.78
			J_1 10^{-3} in.lb.s²	12.1	10.7	9.38	8.65
	M	48	J_1 kgcm²	28.3	26.7	25.3	24.4
			J_1 10^{-3} in.lb.s²	25.0	23.6	22.4	21.6

[a] Other ratios available on request
[b] For higher ambient temperatures, please reduce input speed
[c] Valid for clamping hub diameter of 32 and 38 mm
[d] Refers to center of the output shaft or flange

View A | View B

Motor shaft diameter [mm]

up to 24 [4] (G) clamping hub diameter

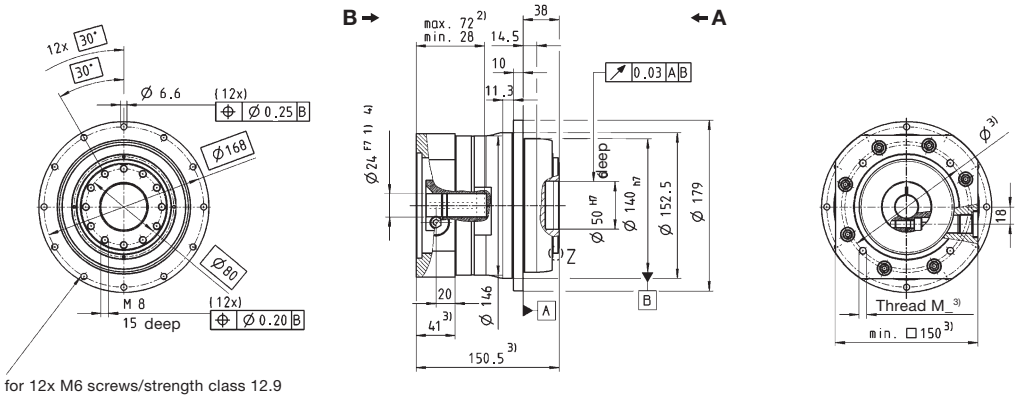

for 12x M6 screws/strength class 12.9

up to 32/38 [4] (I/K) clamping hub diameter

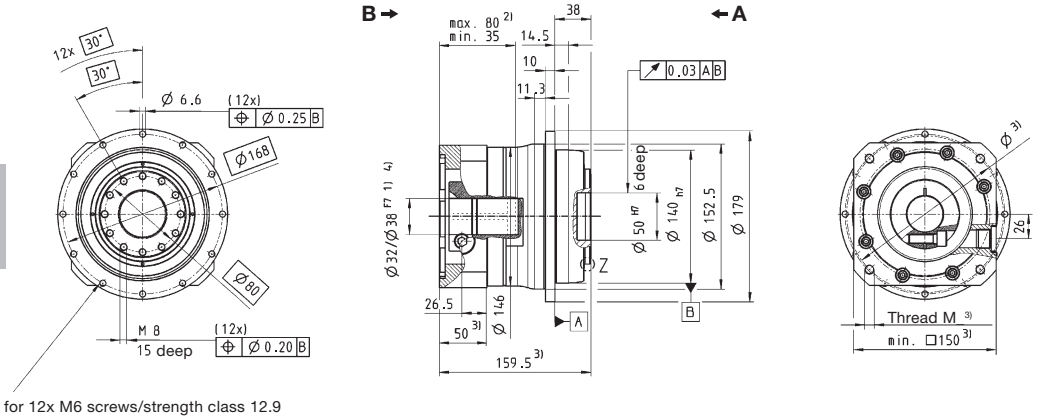

for 12x M6 screws/strength class 12.9

up to 48 [4] (M) clamping hub diameter

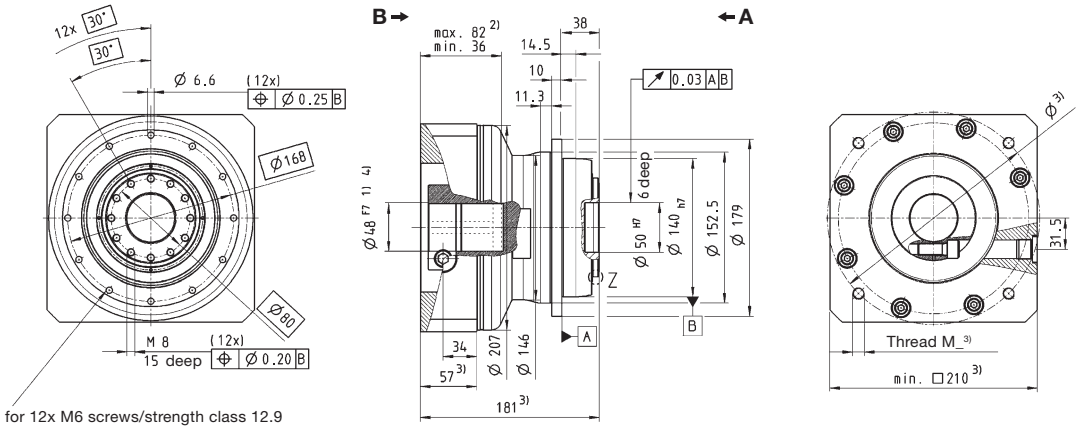

for 12x M6 screws/strength class 12.9

Z: Detail

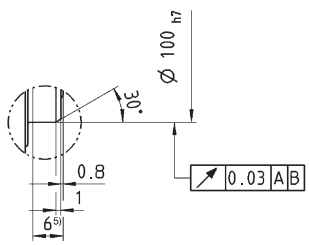

Non-tolerated dimensions ±1 mm

1) Check motor shaft fit.
2) Min./Max. permissible motor shaft length. Longer motor shafts are adaptable, please contact us.
3) The dimensions depend on the motor.
4) Smaller motor shaft diameter is compensated by a bushing with a minimum thickness of 1 mm.
5) Fit length

⚠ Motor mounting according to operating manual

				2-stage												
Ratio [a]			*i*	**16**	**20**	**21**	**25**	**28**	**31**	**35**	**40**	**50**	**61**	**70**	**91**	**100**
Max. acceleration torque (max. 1000 cycles per hour)			T_{2B} Nm	750	750	600	750	750	620	750	750	750	550	700	500	540
			T_{2B} in.lb	6638	6638	5310	6638	6638	5487	6638	6638	6638	4868	6195	4425	4779
Nominal output torque (with n_{1N})			T_{2N} Nm	400	400	350	400	400	400	400	400	400	350	400	220	240
			T_{2N} in.lb	3540	3540	3098	3540	3540	3540	3540	3540	3540	3098	3540	1947	2124
Emergency stop torque (permitted 1000 times during the service life of the gearhead)			T_{2Not} Nm	1250	1250	1250	1250	1250	1250	1250	1250	1250	1250	1250	1250	1250
			T_{2Not} in.lb	11063	11063	11063	11063	11063	11063	11063	11063	11063	11063	11063	11063	11063
Nominal input speed (with T_{2N} and 20°C ambient temperature) [b]			n_{1N} rpm	2900	2900	2900	2900	2900	2900	2900	2900	3200	3200	3200	3900	3900
Max. input speed			n_{1Max} rpm	5000	5000	5000	5000	5000	5000	5000	5000	5000	5000	5000	5000	5000
Mean no load running torque (with n_1=3000 rpm and 20°C gearhead temperature) [c]			T_{012} Nm	4.2	3.4	3.3	3.1	2.5	2.4	2.3	1.8	1.7	1.5	1.5	1.4	1.3
			T_{012} in.lb	37.2	30.1	29.2	27.4	22.1	21.2	20.4	15.9	15.1	13.3	13.3	12.4	11.5
Max. torsional backlash			j_t arcmin	Standard ≤ 3 / Reduced ≤ 1												
Torsional rigidity [c]			C_{t12} Nm/ arcmin	180	185	145	180	180	130	175	175	175	123	145	100	115
			C_{t12} in.lb/ arcmin	1593	1637	1283	1593	1593	1151	1549	1549	1549	1089	1283	885	1018
Tilting rigidity			C_{2K} Nm/ arcmin	560												
			C_{2K} in.lb/ arcmin	4956												
Max. axial force [d]			F_{2AMax} N	6130												
			F_{2AMax} lb_f	1379												
Max. tilting moment			M_{2KMax} Nm	1335												
			M_{2KMax} in.lb	11815												
Efficiency at full load			η %	94												
Service life (For calculation, see the Chapter "Information")			L_h h	> 20000												
Weight incl. standardadapter plate			*m* kg	14.1												
			m lb_m	31.2												
Operating noise (with n_1=3000 rpm no load)			L_{PA} dB(A)	≤ 65												
Max. permitted housing temperature			°C	+90												
			F	194												
Ambient temperature			°C	0 to +40												
			F	32 to 104												
Lubrication				Lubricated for life												
Paint				Blue RAL 5002												
Direction of rotation				Motor and gearhead same direction												
Protection class				IP 65												
Moment of inertia (relates to the drive)	E	19	J_1 kgcm²	2.53	2.07	2.30	2.01	1.67	2.12	1.64	1.44	1.42	1.46	1.41	1.43	1.40
			J_1 10^{-3} in.lb.s²	2.24	1.83	2.04	1.78	1.48	1.88	1.45	1.27	1.26	1.29	1.25	1.27	1.24
Clamping hub diameter [mm]	G	24	J_1 kgcm²	3.22	2.77	2.99	2.70	2.36	2.81	2.33	2.13	2.12	2.15	2.10	2.12	2.09
			J_1 10^{-3} in.lb.s²	2.85	2.45	2.65	2.39	2.09	2.49	2.06	1.89	1.88	1.90	1.86	1.88	1.85
	K	38	J_1 kgcm²	10.3	9.83	10.1	9.77	9.43	9.88	9.40	9.20	9.18	9.22	9.17	9.19	9.16
			J_1 10^{-3} in.lb.s²	9.11	8.70	8.94	8.64	8.35	8.74	8.32	8.14	8.12	8.16	8.12	8.13	8.11

[a] Other ratios available on request
[b] For higher ambient temperatures, please reduce input speed
[c] Valid for clamping hub diameter of 24 mm
[d] Refers to center of the output shaft or flange

View A | View B

Motor shaft diameter [mm]

up to 19 [4] (E) clamping hub diameter

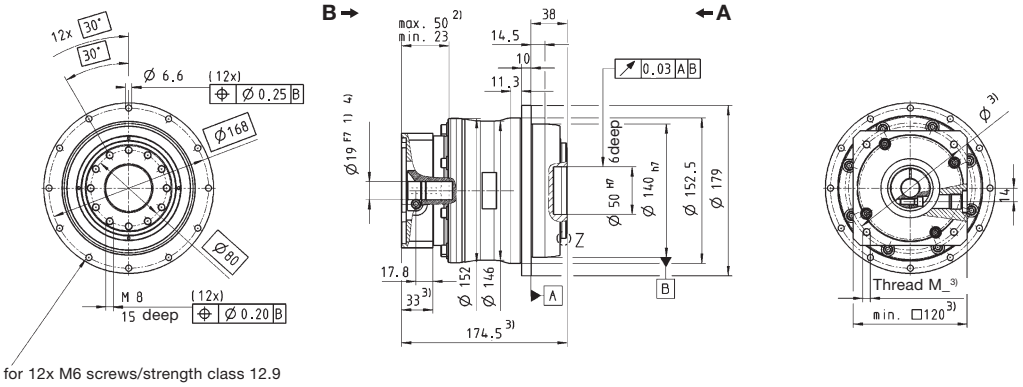

for 12x M6 screws/strength class 12.9

up to 24 [4] (G) clamping hub diameter

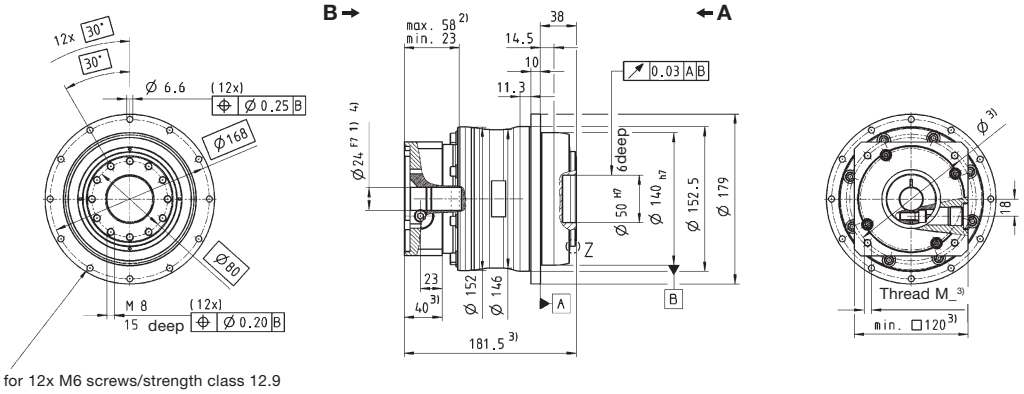

for 12x M6 screws/strength class 12.9

up to 38 [4] (K) clamping hub diameter

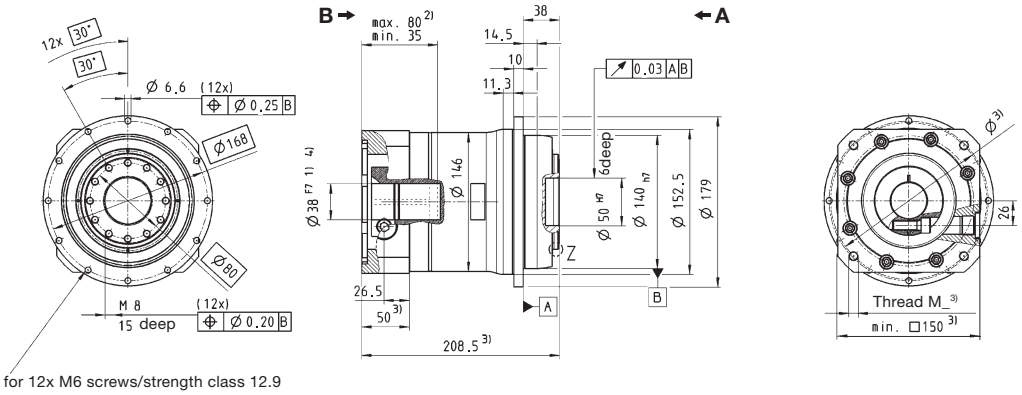

for 12x M6 screws/strength class 12.9

Z: Detail

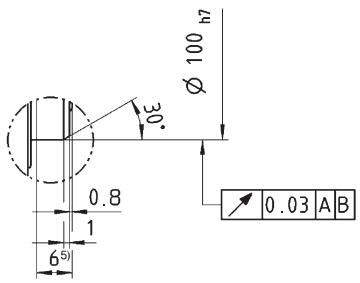

Non-tolerated dimensions ±1 mm

1) Check motor shaft fit.
2) Min./Max. permissible motor shaft length. Longer motor shafts are adaptable, please contact us.
3) The dimensions depend on the motor.
4) Smaller motor shaft diameter is compensated by a bushing with a minimum thickness of 1 mm.
5) Fit length

⚠ Motor mounting according to operating manual

					2-stage				3-stage				
Ratio			i		**22**	**27.5**	**38.5**	**55**	**66**	**88**	**110**	**154**	**220**
Max. acceleration torque (max. 1000 cycles per hour)			T_{2B}	Nm	950	950	950	950	950	950	950	950	950
				in.lb	8408	8408	8408	8408	8408	8408	8408	8408	8408
Nominal output torque (with n_{1N})			T_{2N}	Nm	575	600	650	675	675	675	675	675	675
				in.lb	5089	5310	5753	5974	5974	5974	5974	5974	5974
Emergency stop torque (permitted 1000 times during the service life of the gearhead)			T_{2Not}	Nm	2375	2375	2375	2375	2375	2375	2375	2375	2375
				in.lb	21019	21019	21019	21019	21019	21019	21019	21019	21019
Nominal input speed (with T_{2N} and 20°C ambient temperature) [b]			n_{1N}	rpm	3000	3000	3000	3000	3500	3500	3500	3500	3500
Max. input speed			n_{1Max}	rpm	5000	5000	5000	5000	5000	5000	5000	5000	5000
Mean no load running torque (with n_1=3000 rpm and 20°C gearhead temperature) [c]			T_{012}	Nm	2.7	–	–	–	–	–	1.1	–	0.7
				in.lb	23.9						9.7		6.2
Max. torsional backlash			j_t	arcmin	≤ 1				≤ 1				
Torsional rigidity [c]			C_{t21}	Nm/ arcmin	220	220	220	220	205	205	205	205	205
				in.lb/ arcmin	1947	1947	1947	1947	1814	1814	1814	1814	1814
Tilting rigidity			C_{2K}	Nm/ arcmin	560				560				
				in.lb/ arcmin	4956				4956				
Max. axial force [d]			F_{2AMax}	N	6130				6130				
				lb_f	1379				1379				
Max. tilting moment			M_{2KMax}	Nm	1335				1335				
				in.lb	11815				11815				
Efficiency at full load			η	%	94				92				
Service life (For calculation, see the Chapter "Information")			L_h	h	> 20000				> 20000				
Weight incl. standard adapter plate			m	kg	12.5				13.4				
				lb_m					29.6				
Operating noise (with n_1=3000 rpm no load)			L_{PA}	dB(A)	≤ 64				≤ 64				
Max. permitted housing temperature				°C	+90								
				F	194								
Ambient temperature				°C	0 to +40								
				F	32 to 104								
Lubrication					Lubricated for life								
Paint					Blue RAL 5002								
Direction of rotation					Motor and gearhead same direction								
Protection class					IP 65								
Moment of inertia (relates to the drive)	G	24	J_1	kgcm²	3.76	3.32	3.01	2.82	2.61	2.42	2.22	2.12	2.07
				10^{-3} in.lb.s²	3.33	2.94	2.66	2.50	2.31	2.14	1.96	1.88	1.83
Clamping hub diameter [mm]	K	38	J_1	kgcm²	10.7	10.3	9.92	9.73	–	–	–	–	–
				10^{-3} in.lb.s²	9.47	9.11	8.78	8.61					

[b] For higher ambient temperatures, please reduce input speed
[c] Valid for clamping hub diameter of 24 mm
[d] Refers to center of the output shaft or flange

View A | View B

Motor shaft diameter [mm]

2-stage:

up to 24 [4] (G) clamping hub diameter

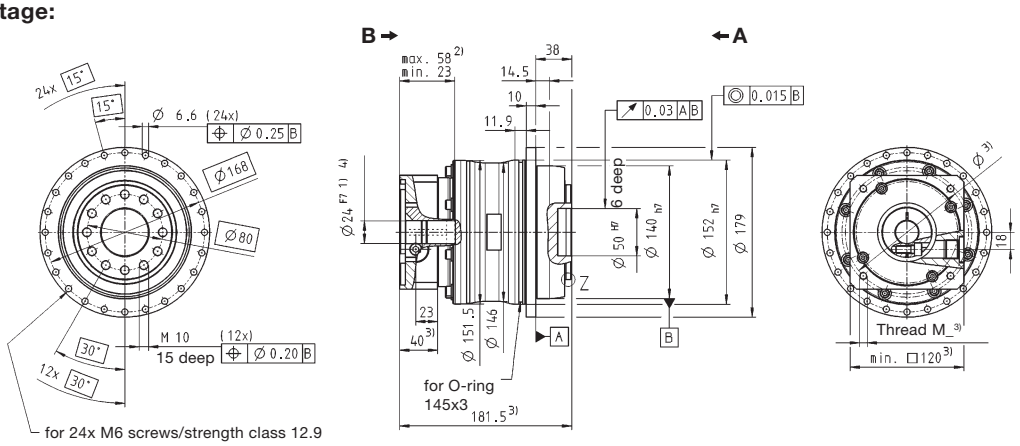

up to 38 [4] (K) clamping hub diameter

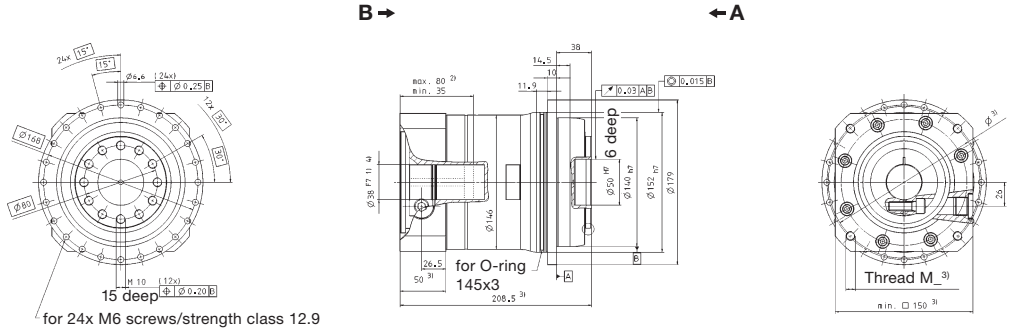

3-stage:

up to 24 [4] (G) clamping hub diameter

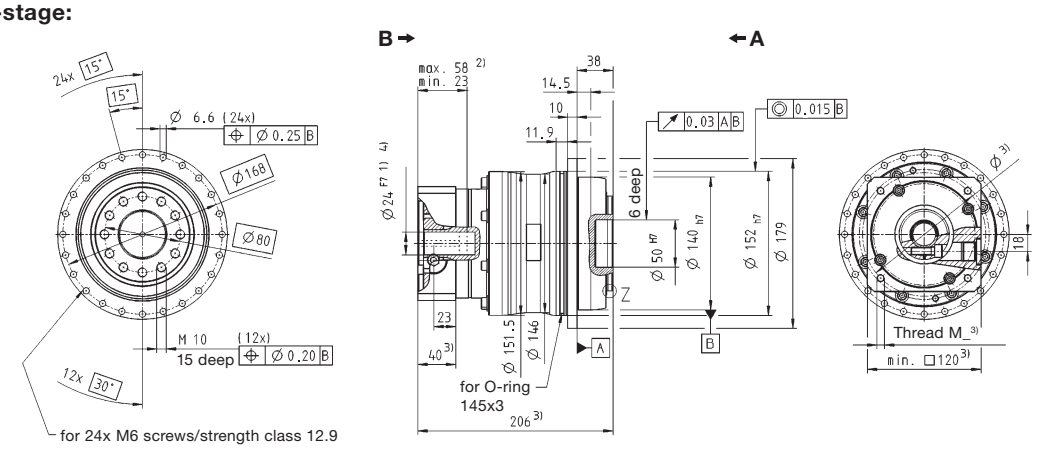

Z: Detail

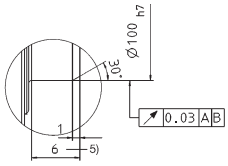

Non-tolerated dimensions ±1 mm

1) Check motor shaft fit.
2) Min./Max. permissible motor shaft length. Longer motor shafts are adaptable, please contact us.
3) The dimensions depend on the motor.
4) Smaller motor shaft diameter is compensated by a bushing with a minimum thickness of 1 mm.
5) Fit length

⚠ Motor mounting according to operating manual

				1-stage			
Ratio [a]			***i***	**4**	**5**	**7**	**10**
Max. acceleration torque (max. 1000 cycles per hour)			T_{2B} Nm	1600	1600	1600	1400
			T_{2B} in.lb	14160	14160	14160	12390
Nominal output torque (with n_{1N})			T_{2N} Nm	700	750	750	750
			T_{2N} in.lb	6195	6638	6638	6638
Emergency stop torque (permitted 1000 times during the service life of the gearhead)			T_{2Not} Nm	2750	2750	2750	2750
			T_{2Not} in.lb	24338	24338	24338	24338
Nominal input speed (with T_{2N} and 20°C ambient temperature) [b]			n_{1N} rpm	1400	1500	2000	2000
Max. input speed			n_{1Max} rpm	3500	3500	3500	3500
Mean no load running torque (with n_1=3000 rpm and 20°C gearhead temperature) [c]			T_{012} Nm	15.6	12.7	9.4	7.0
			T_{012} in.lb	138.1	112.4	83.2	62.0
Max. torsional backlash			j_t arcmin	Standard ≤ 3 / Reduced ≤ 1			
Torsional rigidity [c]			C_{t12} Nm/ arcmin	610	610	550	445
			C_{t12} in.lb/ arcmin	5399	5399	4868	3938
Tilting rigidity			C_{2K} Nm/ arcmin	1452			
			C_{2K} in.lb/ arcmin	12850			
Max. axial force [d]			F_{2AMax} N	10050			
			F_{2AMax} lb_f	2261			
Max. tilting moment			M_{2KMax} Nm	3280			
			M_{2KMax} in.lb	29028			
Efficiency at full load			η %	97			
Service life (For calculation, see the Chapter "Information")			L_h h	> 20000			
Weight incl. standard adapter plate			m kg	30.0			
			m lb_m	66			
Operating noise (with n_1=3000 rpm no load)			L_{PA} dB(A)	≤ 70			
Max. permitted housing temperature			°C	+90			
			F	194			
Ambient temperature			°C	0 to +40			
			F	32 to 104			
Lubrication				Lubricated for life			
Paint				Blue RAL 5002			
Direction of rotation				Motor and gearhead same direction			
Protection class				IP 65			
Moment of inertia (relates to the drive)	K	38	J_1 kgcm²	44.5	34.6	25.5	20.6
			J_1 10^{-3} in.lb.s²	39.4	30.6	22.6	18.2
Clamping hub diameter [mm]	M	48	J_1 kgcm²	51.8	41.9	32.9	28.0
			J_1 10^{-3} in.lb.s²	45.8	37.1	29.1	24.8

[a] Other ratios available on request
[b] For higher ambient temperatures, please reduce input speed
[c] Valid for clamping hub diameter of 48 mm
[d] Refers to center of the output shaft or flange

View A | View B

Motor shaft diameter [mm]

up to 38 [4] (K) clamping hub diameter

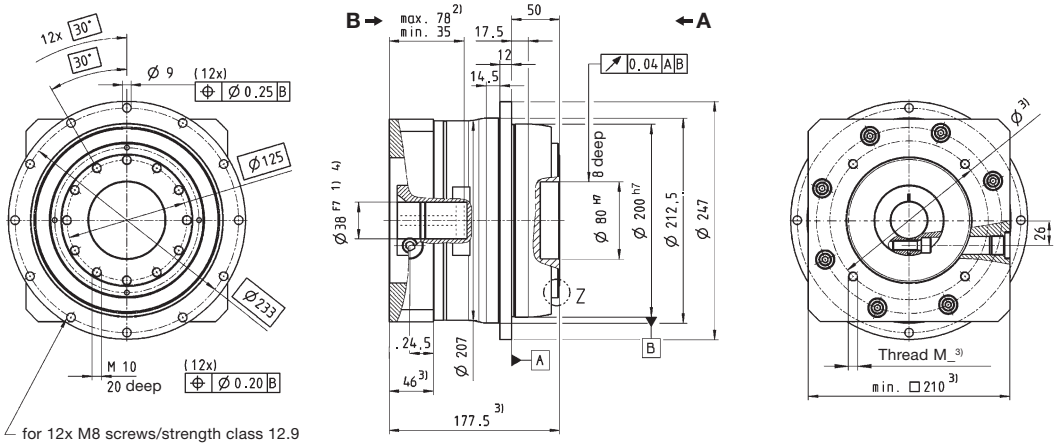

up to 48 [4] (M) clamping hub diameter

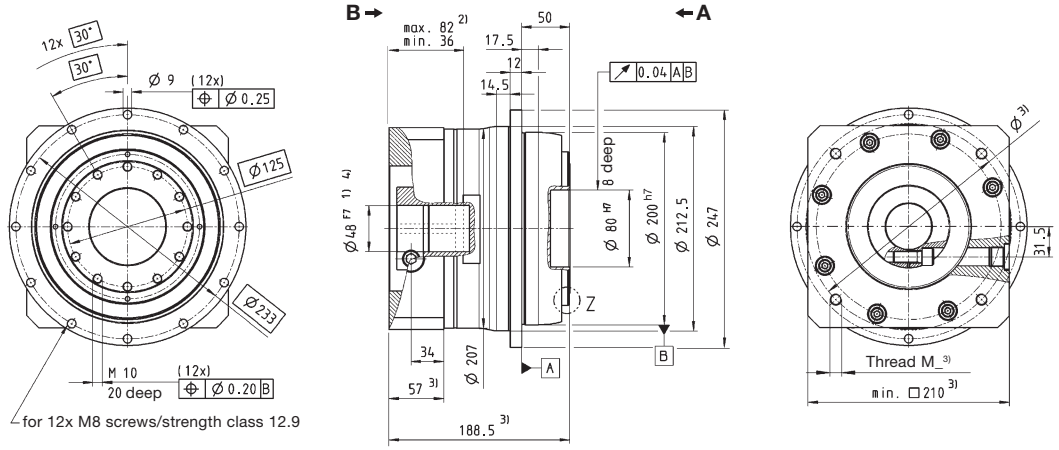

Z: Detail

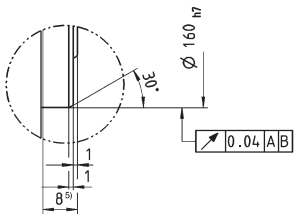

Non-tolerated dimensions ±1 mm

1) Check motor shaft fit.
2) Min./Max. permissible motor shaft length. Longer motor shafts are adaptable, please contact us.
3) The dimensions depend on the motor.
4) Smaller motor shaft diameter is compensated by a bushing with a minimum thickness of 1 mm.
5) Fit length

⚠ Motor mounting according to operating manual

					2-stage												
Ratio [a]			i		**16**	**20**	**21**	**25**	**28**	**31**	**35**	**40**	**50**	**61**	**70**	**91**	**100**
Max. acceleration torque (max. 1000 cycles per hour)			T_{2B}	Nm	1600	1600	1400	1600	1600	1600	1600	1600	1600	1400	1600	1300	1400
				in.lb	14160	14160	12390	14160	14160	14160	14160	14160	14160	12390	14160	11505	12390
Nominal output torque (with n_{1N})			T_{2N}	Nm	980	980	850	1050	1050	1250	1250	850	1050	1100	900	700	800
				in.lb	8673	8673	7523	9293	9293	11063	11063	7523	9293	9735	7965	6195	7080
Emergency stop torque (permitted 1000 times during the service life of the gearhead)			T_{2Not}	Nm	2750	2750	2750	2750	2750	2750	2750	2750	2750	2750	2750	2750	2750
				in.lb	24338	24338	24338	24338	24338	24338	24338	24338	24338	24338	24338	24338	24338
Nominal input speed (with T_{2N} and 20°C ambient temperature) [b]			n_{1N}	rpm	2500	2500	2500	2500	2500	2500	2500	2500	2900	3200	3200	3400	3400
Max. input speed			n_{1Max}	rpm	4000	4000	4000	4000	4000	4000	4000	4000	4000	4000	4000	4000	4000
Mean no load running torque (with n_1=3000 rpm and 20°C gearhead temperature) [c]			T_{012}	Nm	6.9	5.6	5.5	5.0	4.1	3.9	3.7	3.0	2.7	2.5	2.4	2.2	2.2
				in.lb	61.1	49.6	48.7	44.3	36.3	34.5	32.7	26.6	23.9	22.1	21.2	19.5	19.5
Max. torsional backlash			j_t	arcmin	Standard ≤ 3 / Reduced ≤ 1												
Torsional rigidity [c]			C_{t12}	Nm/ arcmin	585	580	465	570	560	440	560	520	525	415	480	360	395
				in.lb/ arcmin	5177	5133	4115	5045	4956	3894	4956	4602	4646	3673	4248	3186	3496
Tilting rigidity			C_{2K}	Nm/ arcmin	1452												
				in.lb/ arcmin	12850												
Max. axial force [d]			F_{2AMax}	N	10050												
				lb_f	2261												
Max. tilting moment			M_{2KMax}	Nm	3280												
				in.lb	29028												
Efficiency at full load			η	%	94												
Service life (For calculation, see the Chapter "Information")			L_h	h	> 20000												
Weight incl. standardadapter plate			m	kg	34.0												
				lb_m	75.1												
Operating noise (with n_1=3000 rpm no load)			L_{PA}	dB(A)	≤ 72												
Max. permitted housing temperature				°C	+90												
				F	194												
Ambient temperature				°C	0 to +40												
				F	32 to 104												
Lubrication					Lubricated for life												
Paint					Blue RAL 5002												
Direction of rotation					Motor and gearhead same direction												
Protection class					IP 65												
Moment of inertia (relates to the drive)	G	24	J_1	kgcm²	8.51	8.21	8.98	7.82	6.57	8.09	6.37	5.63	5.54	5.63	5.44	5.50	5.39
				10^{-3} in.lb.s²	7.53	7.27	7.95	6.92	5.81	7.16	5.64	4.99	4.90	4.99	4.82	4.87	4.77
Clamping hub diameter [mm]	I	32	J_1	kgcm²	11.7	11.4	12.1	11.0	9.73	11.3	9.54	8.80	8.70	8.79	8.61	8.67	8.56
				10^{-3} in.lb.s²	10.3	10.1	10.7	9.72	8.61	9.96	8.44	7.78	7.70	7.78	7.62	7.67	7.57
	K	38	J_1	kgcm²	12.7	12.5	13.2	12.1	10.8	12.3	10.6	9.87	9.77	9.87	9.68	9.74	9.63
				10^{-3} in.lb.s²	11.3	11.0	11.7	10.7	9.6	10.9	9.39	8.73	8.65	8.73	8.56	8.62	8.52
	M	48	J_1	kgcm²	27.4	27.1	27.8	26.7	25.4	26.9	25.3	24.5	24.4	24.5	24.3	24.4	24.3
				10^{-3} in.lb.s²	24.2	24.0	24.6	23.6	22.5	23.8	22.3	21.7	21.6	21.7	21.5	21.6	21.5

[a] Other ratios available on request
[b] For higher ambient temperatures, please reduce input speed
[c] Valid for clamping hub diameter of 32 and 38 mm
[d] Refers to center of the output shaft or flange

View A | View B

Motor shaft diameter [mm]

up to 24 [4] (G) clamping hub diameter

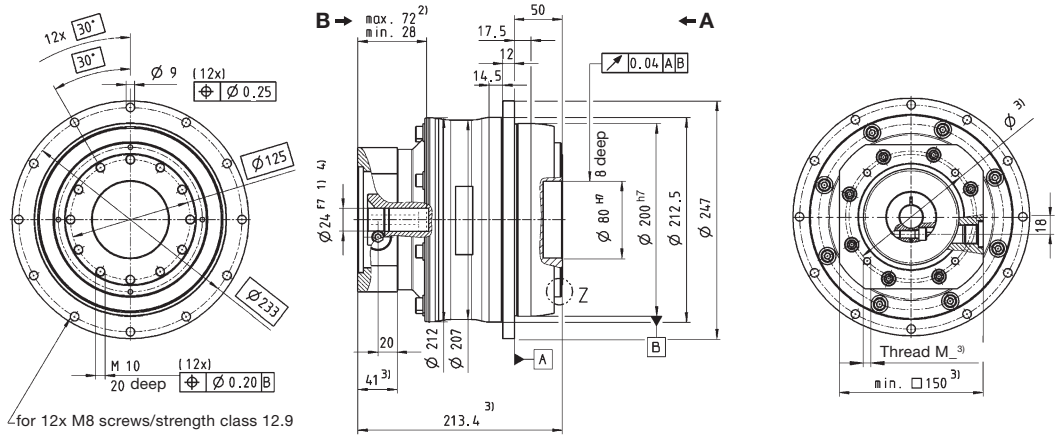

up to 32/38 [4] (I/K) clamping hub diameter

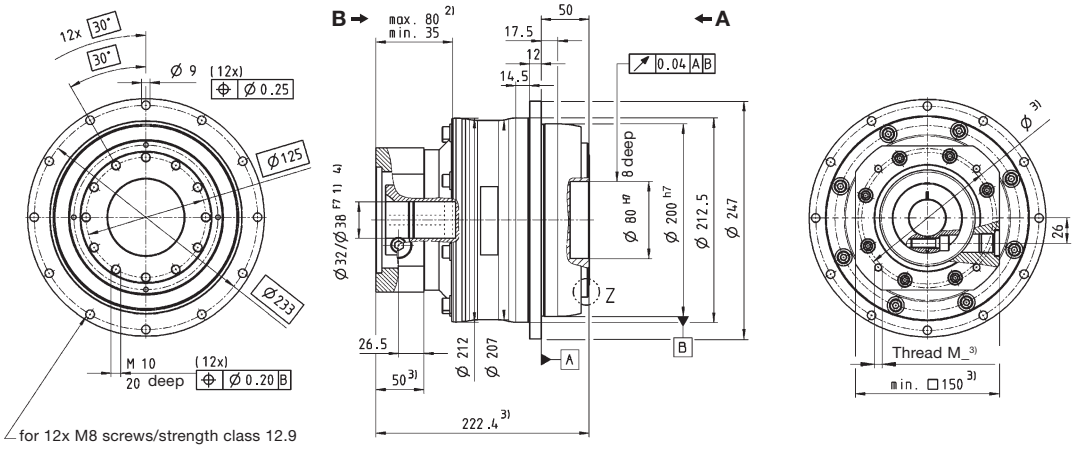

up to 48 [4] (M) clamping hub diameter

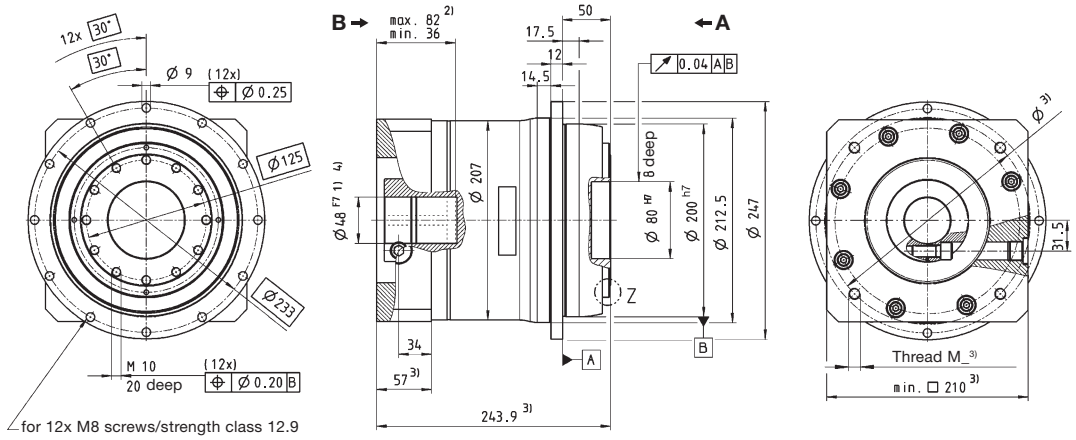

Z: Detail

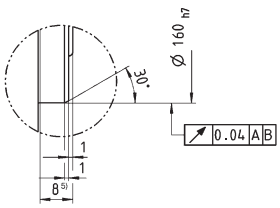

Non-tolerated dimensions ±1 mm

1) Check motor shaft fit.
2) Min./Max. permissible motor shaft length. Longer motor shafts are adaptable, please contact us.
3) The dimensions depend on the motor.
4) Smaller motor shaft diameter is compensated by a bushing with a minimum thickness of 1 mm.
5) Fit length

⚠ Motor mounting according to operating manual

				2-stage				3-stage				
Ratio			***i***	**22**	**27.5**	**38.5**	**55**	**66**	**88**	**110**	**154**	**220**
Max. acceleration torque (max. 1000 cycles per hour)			T_{2B} Nm	3100	3100	3100	2000	2600	2600	2600	2600	2600
			in.lb	27435	27435	27435	17700	23010	23010	23010	23010	23010
Nominal output torque (with n_{1N})			T_{2N} Nm	1570	1600	1650	1400	1600	1750	1750	1750	1750
			in.lb	13895	14160	14603	12390	14160	15488	15488	15488	15488
Emergency stop torque (permitted 1000 times during the service life of the gearhead)			T_{2Not} Nm	6500	6500	6500	6500	6500	6500	6500	6500	6500
			in.lb	57525	57525	57525	57525	57525	57525	57525	57525	57525
Nominal input speed (with T_{2N} and 20°C ambient temperature) [b]			n_{1N} rpm	2500	2500	2500	2500	3000	3000	3000	3000	3000
Max. input speed			n_{1Max} rpm	4500	4500	4500	4500	4500	4500	4500	4500	4500
Mean no load running torque (with n_1=3000 rpm and 20°C gearhead temperature) [c]			T_{012} Nm	6.5	–	–	–	–	3.3	2.5	–	–
			in.lb	57.5					29.2	22.1		
Max. torsional backlash			j_t arcmin	≤ 1				≤ 1				
Torsional rigidity [c]			C_{t12} Nm/ arcmin	730	725	715	670	650	650	650	650	650
			in.lb/ arcmin	6461	6416	6328	5930	5753	5753	5753	5753	5753
Tilting rigidity			C_{2K} Nm/ arcmin	1452				1452				
			in.lb/ arcmin	12850				12850				
Max. axial force [d]			F_{2AMax} N	10050				10050				
			lb_f	2261				2261				
Max. tilting moment			M_{2KMax} Nm	3280				3280				
			in.lb	29028				29028				
Efficiency at full load			η %	94				92				
Service life (For calculation, see the Chapter "Information")			L_h h	> 20000				> 20000				
Weight incl. standard adapter plate			*m* kg	33.1				35.4				
			lb_m	73.2				78.2				
Operating noise (with n_1=3000 rpm no load)			L_{PA} dB(A)	≤ 66				≤ 66				
Max. permitted housing temperature			°C	+90								
			F	194								
Ambient temperature			°C	0 to +40								
			F	32 to 104								
Lubrication				Lubricated for life								
Paint				Blue RAL 5002								
Direction of rotation				Motor and gearhead same direction								
Protection class				IP 65								
Moment of inertia (relates to the drive)	K	38	J_1 kgcm²	16.6	15.2	13.9	13.1	13.8	10.2	9.77	9.47	9.16
			10^{-3} in.lb.s²	14.7	13.5	12.3	11.6	12.2	9.03	8.65	8.38	8.11
Clamping hub diameter [mm]	M	48	J_1 kgcm²	31.4	29.9	28.7	28.0	–	–	–	–	–
			10^{-3} in.lb.s²	27.8	26.5	25.4	24.8					

[b] For higher ambient temperatures, please reduce input speed
[c] Valid for clamping hub diameter of 38 mm
[d] Refers to center of the output shaft or flange

View A | View B

Motor shaft diameter [mm]

2-stage:

up to 38 [4] (K) clamping hub diameter

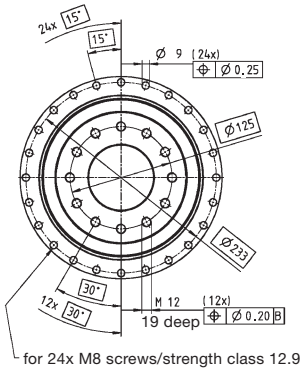

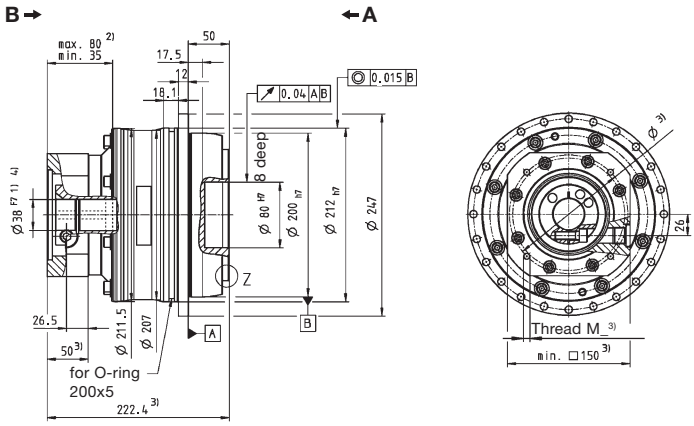

up to 48 [4] (M) clamping hub diameter

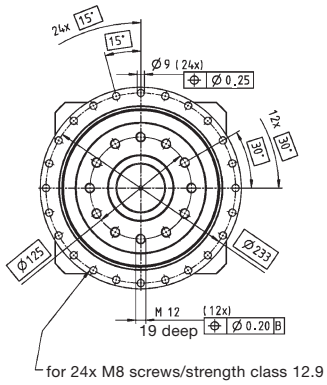

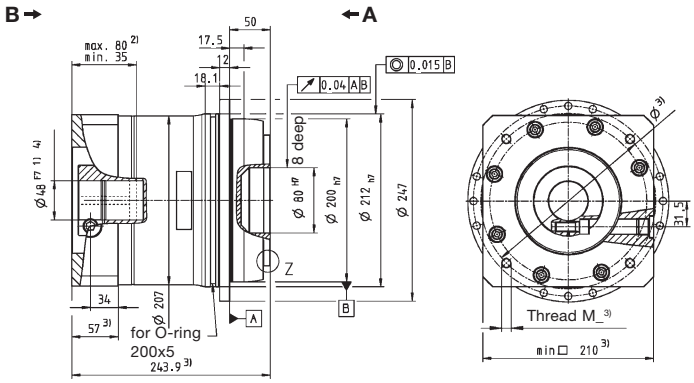

3-stage:

up to 38 [4] (K) clamping hub diameter

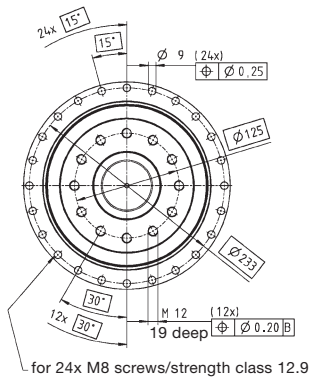

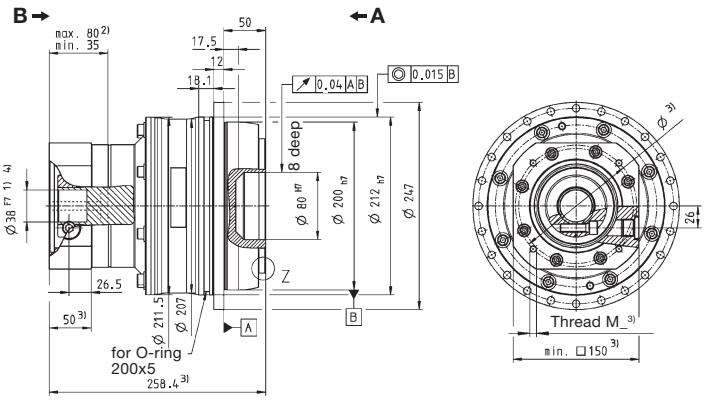

Z: Detail

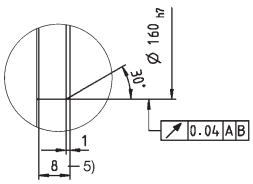

Non-tolerated dimensions ±1 mm

1) Check motor shaft fit.
2) Min./Max. permissible motor shaft length. Longer motor shafts are adaptable, please contact us.
3) The dimensions depend on the motor.
4) Smaller motor shaft diameter is compensated by a bushing with a minimum thickness of 1 mm.
5) Fit length

⚠ Motor mounting according to operating manual

				1-stage			2-stage									
Ratio [a]			***i***	**5**	**7**	**10**	**20**	**21**	**25**	**31**	**35**	**50**	**61**	**70**	**91**	**100**
Max. acceleration torque (max. 1000 cycles per hour)			T_{2B} Nm	3500	3300	1900	3500	3400	3500	3500	3500	3000	2800	3300	2800	2800
			T_{2B} in.lb	30975	29205	16815	30975	30090	30975	30975	30975	26550	24780	29205	24780	24780
Nominal output torque (with n_{1N})			T_{2N} Nm	2200	1800	1000	2300	2100	2400	2200	2500	1900	1600	1800	1600	1600
			T_{2N} in.lb	19470	15930	8850	20355	18585	21240	19470	22125	16815	14160	15930	14160	14160
Emergency stop torque (permitted 1000 times during the service life of the gearhead)			T_{2Not} Nm	8750	8750	8750	8750	8750	8750	8750	8750	8750	8750	8750	8750	8750
			T_{2Not} in.lb	77438	77438	77438	77438	77438	77438	77438	77438	77438	77438	77438	77438	77438
Nominal input speed (with T_{2N} and 20°C ambient temperature) [b]			n_{1N} rpm	1200	1700	1700	2000	2000	2000	2000	2000	2300	2400	2400	2500	2500
Max. input speed			n_{1Max} rpm	2500	2500	2500	3500	3500	3500	3500	3500	3500	3500	3500	3500	3500
Mean no load running torque (with n_1=2000 rpm and 20°C gearhead temperature)			T_{012} Nm	–	–	11	–	–	–	–	–	–	2.8	–	–	–
			T_{012} in.lb			97.4							24.8			
Max. torsional backlash			j_t arcmin	Standard ≤ 3 / Reduced ≤ 1			Standard ≤ 3 / Reduced ≤ 2									
Torsional rigidity			C_{t12} Nm/ arcmin	1000	900	700	850	800	950	750	900	800	700	800	600	650
			C_{t12} in.lb/ arcmin	8850	7965	6195	7523	7080	9408	6638	7965	7080	6195	7080	5310	5753
Tilting rigidity			C_{2K} Nm/ arcmin	5560												
			C_{2K} in.lb/ arcmin	49206												
Max. axial force [c]			F_{2AMax} N	33000												
			F_{2AMax} lb_f	7425												
Max. tilting moment			M_{2KMax} Nm	5900												
			M_{2KMax} in.lb	52215												
Efficiency at full load			η %	95			93									
Service life (For calculation, see the Chapter "Information")			L_h h	> 20000												
Weight incl. standard adapter plate			*m* kg	60			58.5									
			m lb_m	132.6			129.3									
Operating noise (with n_1=2000 rpm without load)			L_{PA} dB(A)	≤ 67												
Max. permitted housing temperature			°C	+90												
			F	194												
Ambient temperature			°C	0 to +40												
			F	32 to 104												
Lubrication				Lubricated for life												
Paint				Blue RAL 5002												
Direction of rotation				Motor and gearhead same direction												
Protection class				IP 65												
Moment of inertia (relates to the drive)	M	48	J_1 kgcm²	–	–	–	27.5	27.0	25.9	25.6	22.4	21.5	21.4	21.3	21.2	21.2
			J_1 10^{-3} in.lb.s²				24.3	23.9	22.9	22.7	19.8	19.0	18.9	18.9	18.8	18.8
Clamping hub diameter [mm]	N	55	J_1 kgcm²	82.6	61.2	49.5	–	–	–	–	–	–	–	–	–	–
			J_1 10^{-3} in.lb.s²	73.1	54.2	43.8										

[a] Other ratios available on request
[b] For higher ambient temperatures, please reduce input speed
[c] Refers to center of the output shaft or flange

View A | View B

Motor shaft diameter [mm]

up to 55 [4] (N) clamping hub diameter

1-stage:

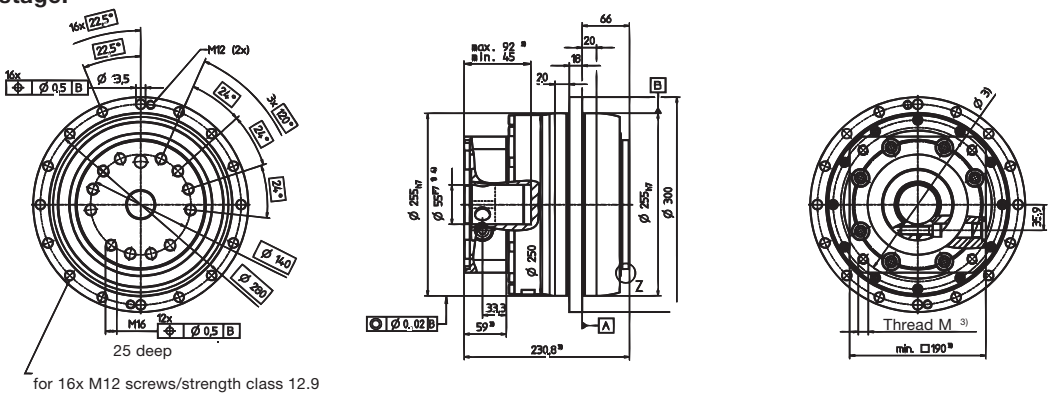

up to 48 [4] (M) clamping hub diameter

2-stage:

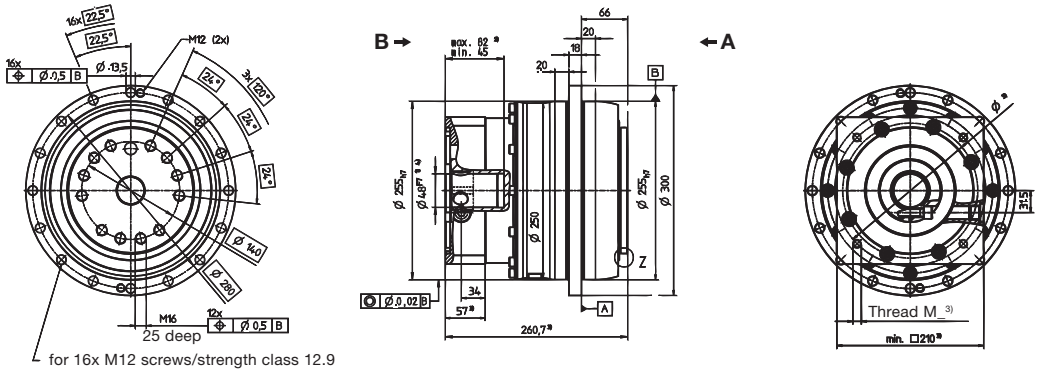

Z: Detail

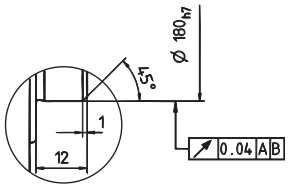

Non-tolerated dimensions ±1 mm

1) Check motor shaft fit.
2) Min./Max. permissible motor shaft length. Longer motor shafts are adaptable, please contact us.
3) The dimensions depend on the motor.
4) Smaller motor shaft diameter is compensated by a bushing with a minimum thickness of 1 mm.

⚠ Motor mounting according to operating manual

				1-stage	2-stage				3-stage				
Ratio [a]			*i*	**5.5**	**22**	**27.5**	**38.5**	**55**	**66**	**88**	**110**	**154**	**220**
Max. acceleration torque (max. 1000 cycles per hour)			T_{2B} Nm	4600	5500	5500	5500	3900	5500	5500	5500	5500	5500
			T_{2B} in.lb	40714	48679	48679	48679	34518	48679	48679	48679	48679	48679
Nominal output torque (with n_{1N})			T_{2N} Nm	2200	3500	3500	3500	2500	3500	3500	3500	3500	3500
			T_{2N} in.lb	19472	30978	30978	30978	22127	30978	30978	30978	30978	30978
Emergency stop torque (permitted 1000 times during the service life of the gearhead)			T_{2Not} Nm	8750	13250	13250	13250	13250	13250	13250	13250	13250	13250
			T_{2Not} in.lb	77445	117273	117273	117273	117273	117273	117273	117273	117273	117273
Nominal input speed (with T_{2N} and 20°C ambient temperature) [b]			n_{1N} rpm	1000	2000	2000	2000	2000	2000	2000	2000	2000	2000
Max. input speed			n_{1Max} rpm	2500	3500	3500	3500	3500	3500	3500	3500	3500	3500
Mean no load running torque (with n_1=2000 rpm and 20°C gearhead temperature)			T_{012} Nm	20	8.00	–	–	–	–	–	–	–	1.50
			T_{012} in.lb	177	71								13
Max. torsional backlash			j_t arcmin	Standard ≤ 2 / Reduced ≤ 1	Standard ≤ 3 / Reduced ≤ 1								
Torsional rigidity			C_{t12} Nm/ arcmin	1400	1200	–	–	–	–	–	1200	–	–
			C_{t12} in.lb/ arcmin	12391	10621						10621		
Tilting rigidity			C_{2K} Nm/ arcmin	5560									
			C_{2K} in.lb/ arcmin	49210									
Max. axial force [c]			F_{2AMax} N	33000									
			F_{2AMax} lb_f	7425									
Max. tilting moment			M_{2KMax} Nm	3900	6500								
			M_{2KMax} in.lb	34518	57530								
Efficiency at full load			η %	95	93								
Service life (For calculation. see "Technical Basics")			L_h h	> 20000									
Weight incl. standard adapter plate			*m* kg	55	64				67				
			m lb_m	121.25	141.1				147.7				
Operating noise (with n_1=2000 rpm no load)			L_{PA} dB(A)	≤ 68	≤ 67				≤ 66				
Max. permitted housing temperature			°C	+90									
			F	194									
Ambient temperature			°C	0 to +40									
			F	32 to 104									
Lubrication				Lubricated for life									
Paint				Blue RAL 5002									
Mounting position				Motor and gearhead same direction									
Protection class				IP 65									
Moment of inertia (relates to the drive)	K	38	J_1 kgcm²	–	–	–	–	–	16.6	12.9	11.6	10.3	9.50
			J_1 10^{-3} in.lb.s²						0.0147	0.0114	0.0103	0.0091	0.0084
Clamping hub diameter [mm]	M	48	J_1 kgcm²		30.8	27.6	24.9	23.0	–	–	–	–	–
			J_1 10^{-3} in.lb.s²		0.0273	0.0244	0.0220	0.0204					
	N	55	J_1 kgcm²	129	–	–	–	–	–	–	–	–	–
			J_1 10^{-3} in.lb.s²	0.1142									

[a] Other ratios available on request
[b] For higher ambient temperatures, please reduce input speed
[c] Refers to center of the output shaft or flange

Motor shaft diameter [mm]

	View A	View B
up to 55 [4] (N) clamping hub diameter	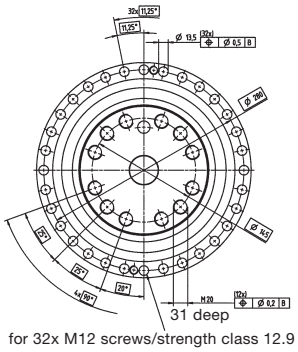 for 32x M12 screws/strength class 12.9	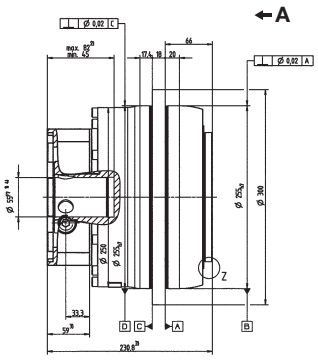
up to 48 [4] (M) clamping hub diameter	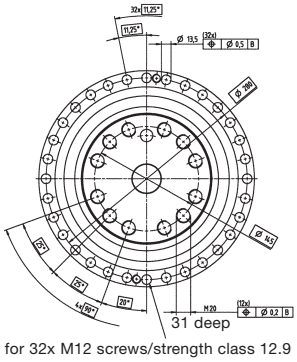 for 32x M12 screws/strength class 12.9	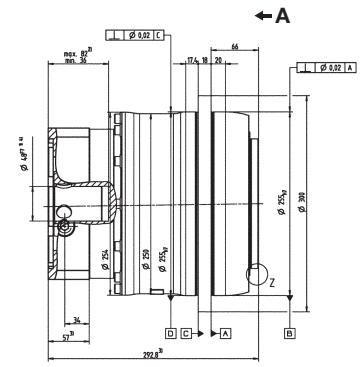
up to 38 [4] (K) clamping hub diameter	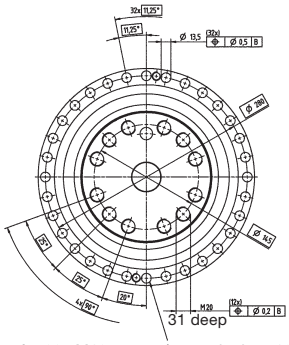 for 32x M12 screws/strength class 12.9	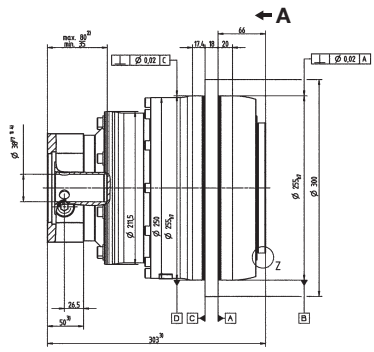

Z: Detail

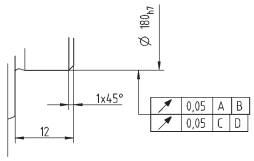

Non-tolerated dimensions ±1 mm

1) Check motor shaft fit.
2) Min./Max. permissible motor shaft length. Longer motor shafts are adaptable, please contact us.
3) The dimensions depend on the motor.
4) Smaller motor shaft diameter is compensated by a bushing with a minimum thickness of 1 mm.
5) Fit length

⚠ Motor mounting according to operating manual

				1-stage			2-stage									
Ratio [a]			*i*	**5**	**7**	**10**	**20**	**21**	**25**	**31**	**35**	**50**	**61**	**70**	**91**	**100**
Max. acceleration torque (max. 1000 cycles per hour)			T_{2B} Nm	6000	5000	3400	6000	5000	6000	6000	6000	4500	4800	5000	4800	4800
			in.lb	53100	44250	30090	53100	44250	53100	53100	53100	39825	42480	44250	42480	42480
Nominal output torque (with n_{1N})			T_{2N} Nm	3250	2800	1700	3350	3200	3800	3700	3800	2900	2900	2800	2900	2900
			in.lb	28763	24780	15045	29648	28320	33630	32745	33630	25665	25665	24780	25665	25665
Emergency stop torque (permitted 1000 times during the service life of the gearhead)			T_{2Not} Nm	15000	15000	15000	15000	15000	15000	15000	15000	15000	15000	15000	15000	15000
			in.lb	132750	132750	132750	132750	132750	132750	132750	132750	132750	132750	132750	132750	132750
Nominal input speed (with T_{2N} and 20°C ambient temperature) [b]			n_{1N} rpm	1000	1500	1500	1500	1500	1500	1500	1500	2000	2100	2100	2200	2200
Max. input speed			n_{1Max} rpm	2200	2200	2200	3500	3500	3500	3500	3500	3500	3500	3500	3500	3500
Mean no load running torque (with n_1=2000 rpm and 20°C gearhead temperature)			T_{012} Nm	20	–	14	–	–	–	–	–	–	–	–	2	–
			in.lb	177		123.9									17.7	
Max. torsional backlash			j_t arcmin	Standard ≤ 3 / Reduced ≤ 1			Standard ≤ 3 / Reduced ≤ 2									
Torsional rigidity			C_{t12} Nm/ arcmin	1450	1300	1050	1400	1200	1450	1200	1400	1300	1100	1250	950	1050
			in.lb/ arcmin	12833	11505	9293	12390	10620	12833	10620	12390	11505	9735	11063	8401	9293
Tilting rigidity			C_{2K} Nm/ arcmin	9480												
			in.lb/ arcmin	83898												
Max. axial force [c]			F_{2AMax} N	50000												
			lb_f	11250												
Max. tilting moment			M_{2KMax} Nm	8800												
			in.lb	77880												
Efficiency at full load			η %	95			93									
Service life (For calculation, see the Chapter "Information")			L_h h	> 20000												
Weight incl. standard adapter plate			*m* kg	82			77.5									
			lb_m	181.2			171.3									
Operating noise (with n_1=2000 rpm no load)			L_{PA} dB(A)	≤ 69												
Max. permitted housing temperature			°C	+90												
			F	194												
Ambient temperature			°C	0 to +40												
			F	32 to 104												
Lubrication				Lubricated for life												
Paint				Blue RAL 5002												
Direction of rotation				Motor and gearhead same direction												
Protection class				IP 65												
Moment of inertia (relates to the drive)	M	48	J_1 kgcm²	–	–	–	32.3	37.6	31.1	32.8	25.1	23.2	23.6	23.2	23.0	22.7
			10^{-3} in.lb.s²				28.6	33.3	27.5	29.0	22.2	20.5	20.9	20.5	20.4	20.1
Clamping hub diameter [mm]	O	60	J_1 kgcm²	175.5	137.0	115.8	–	–	–	–	–	–	–	–	–	–
			10^{-3} in.lb.s²	155.3	121.2	102.5										

[a] Other ratios available on request
[b] For higher ambient temperatures, please reduce input speed
[c] Refers to center of the output shaft or flange

View A | View B

Motor shaft diameter [mm]

1-stage:

up to 60 [4] (O) clamping hub diameter

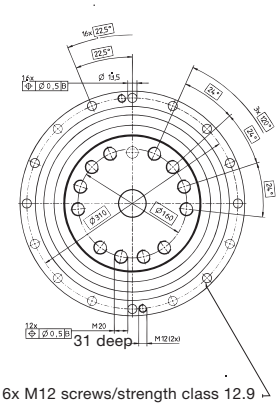

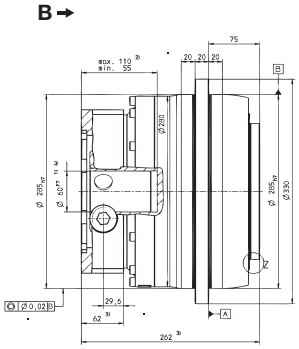

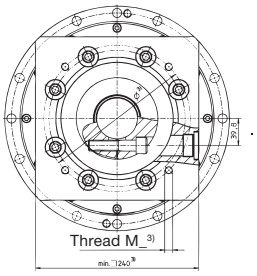

2-stage:

up to 48 [4] (M) clamping hub diameter

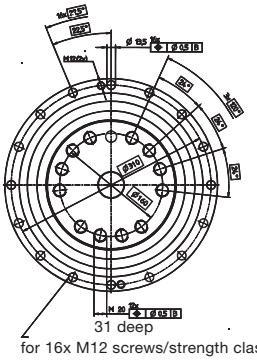

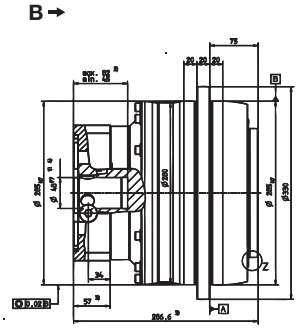

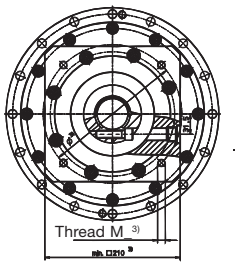

Z: Detail

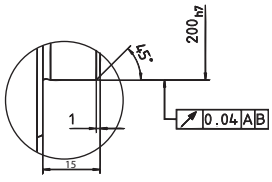

Non-tolerated dimensions ±1 mm

1) Check motor shaft fit.
2) Min./Max. permissible motor shaft length. Longer motor shafts are adaptable, please contact us.
3) The dimensions depend on the motor.
4) Smaller motor shaft diameter is compensated by a bushing with a minimum thickness of 1 mm.

⚠ Motor mounting according to operating manual

				1-stage	2-stage				3-stage				
Ratio [a]			*i*	**5.5**	**22**	**27.5**	**38.5**	**55**	**66**	**88**	**110**	**154**	**220**
Max. acceleration torque (max. 1000 cycles per hour)			T_{2B} Nm	8000	10000	10000	10000	7200	10000	10000	10000	10000	10000
			T_{2B} in.lb	70806	88508	88508	88508	63726	88508	88508	88508	88508	88508
Nominal output torque (with n_{1N})			T_{2N} Nm	3500	6000	4600	4600	4700	6000	6000	6000	6000	6000
			T_{2N} in.lb	30978	53105	40714	40714	41599	53105	53105	53105	53105	53105
Emergency stop torque (permitted 1000 times during the service life of the gearhead)			T_{2Not} Nm	15000	25000	25000	25000	25000	25000	25000	25000	25000	25000
			T_{2Not} in.lb	132762	221270	221270	221270	221270	221270	221270	221270	221270	221270
Nominal input speed (with T_{2N} and 20°C ambient temperature) [b]			n_{1N} rpm	900	1500	1500	1500	1500	1500	1500	1500	1500	1500
Max. input speed			n_{1Max} rpm	2500	3500	3500	3500	3500	3500	3500	3500	3500	3500
Mean no load running torque (with n_1=2000 rpm and 20°C gearhead temperature)			T_{012} Nm	28.0	13.0	–	–	–	–	–	–	–	2.50
			T_{012} in.lb	248	115								22
Max. torsional backlash			j_t arcmin	Standard ≤ 2 / Reduced ≤ 1	Standard ≤ 3 / Reduced ≤ 1								
Torsional rigidity			C_{t12} Nm/ arcmin	2000	1500	–	–	–	–	–	1500	–	–
			C_{t12} in.lb/ arcmin	17702	13276						13276		
Tilting rigidity			C_{2K} Nm/ arcmin	9480									
			C_{2K} in.lb/ arcmin	83906									
Max. axial force [c]			F_{2AMax} N	50000									
			F_{2AMax} lb_f	11250									
Max. tilting moment			M_{2KMax} Nm	6600	9500								
			M_{2KMax} in.lb	58415	84083								
Efficiency at full load			η %	95	93								
Service life (For calculation, see "Technical Basics")			L_h h	> 20000									
Weight incl. standardadapter plate			*m* kg	80					89				
			m lb_m	176.4					196.2				
Operating noise (with n_1=2000 rpm no load)			L_{PA} dB(A)	≤ 68					≤ 67				
Max. permitted housing temperature			°C	+90									
			F	194									
Ambient temperature			°C	0 to +40									
			F	32 to 104									
Lubrication				Lubricated for life									
Paint				Blue RAL 5002									
Mounting position				Motor and gearhead same direction									
Protection class				IP 65									
Moment of inertia (relates to the drive)	M	48	J_1 kgcm²	–	43.8	36.9	30.5	27.0	32.7	28.3	26.7	25.2	24.4
			J_1 10^{-3} in.lb.s²		0.0388	0.0327	0.0270	0.0239	0.0289	0.0250	0.0236	0.0223	0.0216
Clamping hub diameter [mm]	O	60	J_1 kgcm²	175	–	–	–	–	–	–	–	–	–
			J_1 10^{-3} in.lb.s²	0.1549									

[a] Other ratios available on request
[b] For higher ambient temperatures, please reduce input speed
[c] Refers to center of the output shaft or flange

View A | View B

Motor shaft diameter [mm]

up to 60 [4] (O) clamping hub diameter

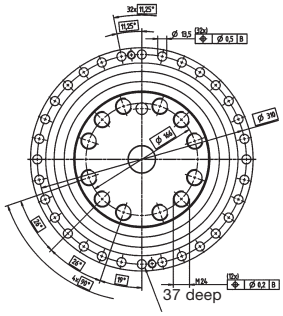

for 32x M12 screws/strength class 12.9

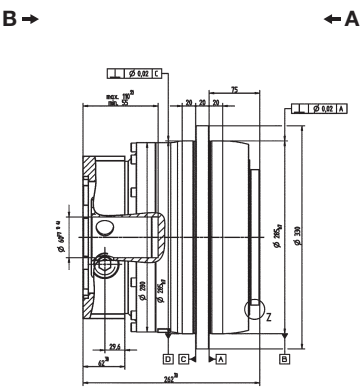

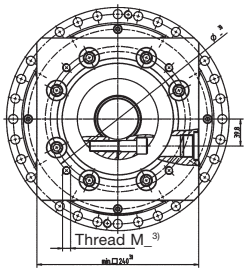

up to 48 [4] (M) clamping hub diameter

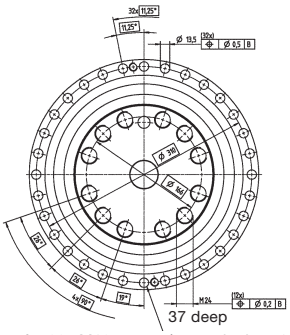

for 32x M12 screws/strength class 12.9

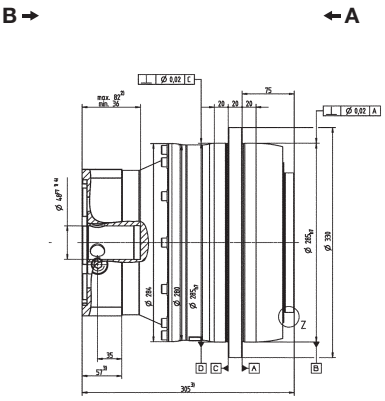

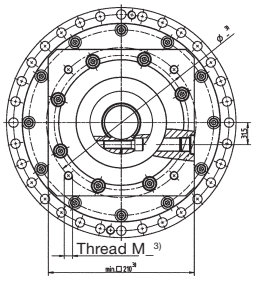

up to 48 [4] (M) clamping hub diameter

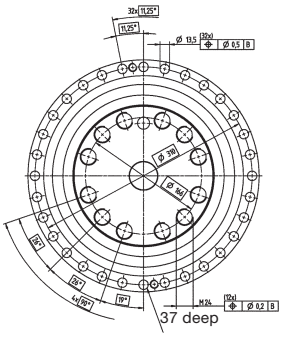

for 32x M12 screws/strength class 12.9

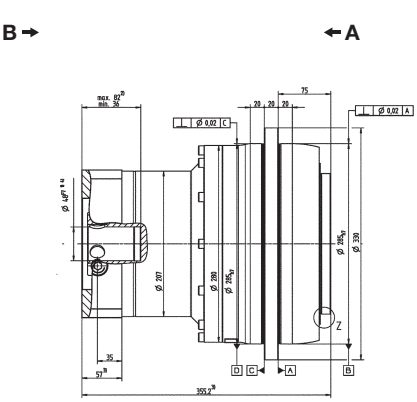

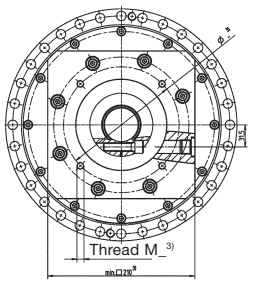

Z: Detail

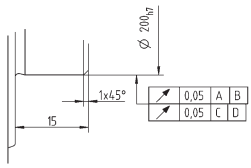

Non-tolerated dimensions ±1 mm

1) Check motor shaft fit.
2) Min./Max. permissible motor shaft length. Longer motor shafts are adaptable, please contact us.
3) The dimensions depend on the motor.
4) Smaller motor shaft diameter is compensated by a bushing with a minimum thickness of 1 mm.
5) Fit length

⚠ Motor mounting according to operating manual



SP⁺ – The classic all-rounder among planetary gearheads

MF version for Cyclic operation S5 from page 68 on
MC version for Continuous operation S1 from page 92 on



					1-stage				
Ratio [a]			***i***		**3**	**4**	**5**	**7**	**10**
cymex®-optimized acceleration torque (please contact us regarding the design)			T_{2Bcym}	Nm	–	58	60	54	–
				in.lb		513	531	478	
Max. acceleration torque (max. 1000 cycles per hour)			T_{2B}	Nm	30	40	40	40	32
				in.lb	266	354	354	354	283
Nominal output torque (with n_{1N})			T_{2N}	Nm	17	26	26	26	17
				in.lb	150	230	230	230	150
Emergency stop torque (permitted 1000 times during the service life of the gearhead)			T_{2Not}	Nm	80	100	100	100	80
				in.lb	708	885	885	885	708
Nominal input speed (with T_{2N} and 20°C ambient temperature) [b]			n_{1N}	rpm	3300	3300	3300	4000	4000
Max. input speed			n_{1max}	rpm	6000	6000	6000	6000	6000
Mean no load running torque (with n_1=3000 rpm and 20°C gearhead temperature) [c]			T_{012}	Nm	0.9	0.7	0.6	0.4	0.3
				in.lb	8.0	6.2	5.3	3.5	2.7
Max. torsional backlash			j_t	arcmin	Standard ≤ 4 / Reduced ≤ 2				
Torsional rigidity			C_{t21}	Nm/ arcmin	3.5				
				in.lb/ arcmin	31				
Max. axial force [d]			F_{2AMax}	N	2400				
				lb_f	540				
Max. radial force [d]			F_{2RMax}	N	2700				
				lb_f	608				
Max. tilting torque			M_{2KMax}	Nm	152				
				in.lb	1345				
Efficiency at full load			η	%	97				
Service life (For calculation, see the Chapter "Information")			L_h	h	> 20000				
Weight incl. standard adapter plate			m	kg	1.9				
				lb_m	4.2				
Operating noise (with n_1=3000 rpm no load)			L_{PA}	dB(A)	≤ 64				
Max. permitted housing temperature				°C	+90				
				F	194				
Ambient temperature				°C	0 to +40				
				F	32 to 104				
Lubrication					Lubricated for life				
Paint					Blue RAL 5002				
Direction of rotation					Motor and gearhead same direction				
Protection class					IP 65				
Moment of inertia (relates to the drive)	B	11	J_1	kgcm²	0.21	0.15	0.12	0.10	0.09
				10^{-3} in.lb.s²	0.18	0.13	0.11	0.09	0.08
Clamping hub diameter [mm]	C	14	J_1	kgcm²	0.28	0.22	0.20	0.18	0.17
				10^{-3} in.lb.s²	0.25	0.20	0.17	0.16	0.15
	E	19	J_1	kgcm²	0.61	0.55	0.52	0.50	0.49
				10^{-3} in.lb.s²	0.54	0.48	0.46	0.44	0.43

[a] Other ratios available on request
[b] For higher ambient temperatures, please reduce input speed
[c] Valid for clamping hub diameter of 14 mm
[d] Refers to center of the output shaft or flange

Motor shaft diameter [mm]

	View A	View B
up to 11 [4] (B) clamping hub diameter	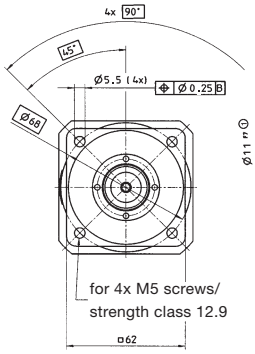	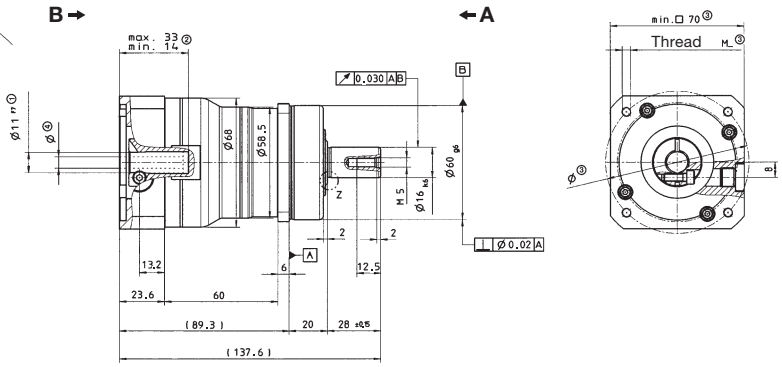
up to 14 [4] (C) clamping hub diameter)	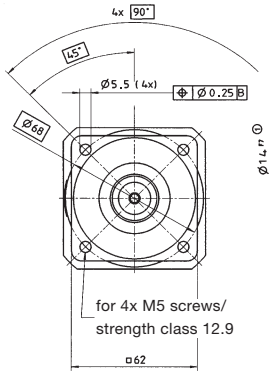	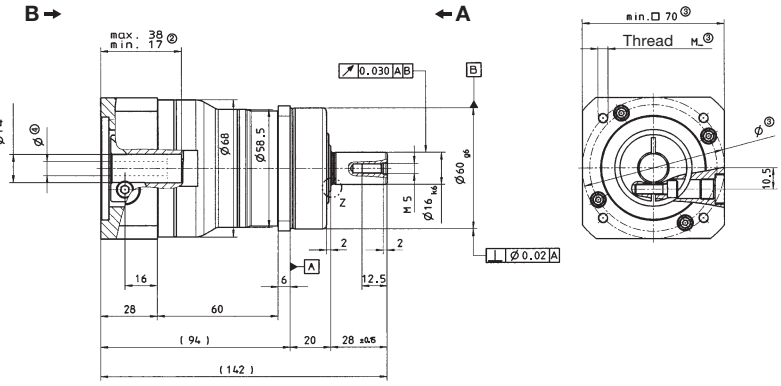
up to 19 [4] (E) clamping hub diameter	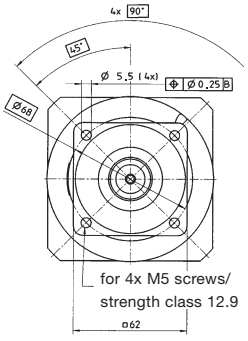	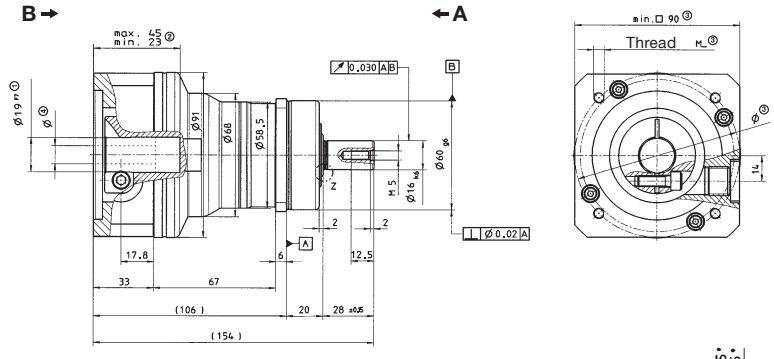

Alternatives: Output shaft variants

Keywayed output shaft in mm

E = key as per DIN 6885, sheet 1, form A

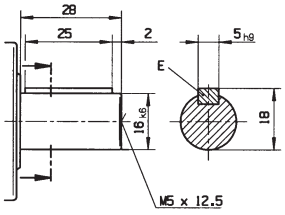

Involute gearing DIN 5480 in mm

X = W 16 x 0.8 x 30 x 18 x 6m, DIN 5480

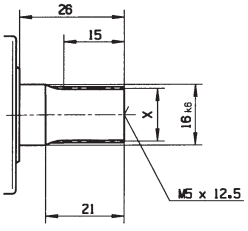

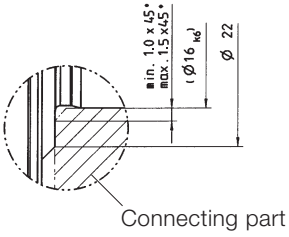

Z: Detail

Connecting part

Non-tolerated dimensions ± 1 mm

1) Check motor shaft fit.
2) Min./Max. permissible motor shaft length. Longer motor shafts are adaptable, please contact us.
3) The dimensions depend on the motor.
4) Smaller motor shaft diameter is compensated by a bushing with a minimum thickness of 1 mm.

⚠ Motor mounting according to operating manual

SP+ 060 MF 2-stage

					2-stage								
Ratio [a]			i		**16**	**20**	**25**	**28**	**35**	**40**	**50**	**70**	**100**
cymex®-optimized acceleration torque (please contact us regarding the design)			T_{2Bcym}	Nm	58	58	60	58	60	58	60	54	–
				in.lb	513	513	531	513	531	513	531	478	–
Max. acceleration torque (max. 1000 cycles per hour)			T_{2B}	Nm	40	40	40	40	40	40	40	40	32
				in.lb	354	354	354	354	354	354	354	354	283
Nominal output torque (with n_{1N})			T_{2N}	Nm	26	26	26	26	26	26	26	26	17
				in.lb	230	230	230	230	230	230	230	230	150
Emergency stop torque (permitted 1000 times during the service life of the gearhead)			T_{2Not}	Nm	100	100	100	100	100	100	100	100	80
				in.lb	885	885	885	885	885	885	885	885	708
Nominal input speed (with T_{2N} and 20°C ambient temperature) [b]			n_{1N}	rpm	4400	4400	4400	4400	4400	4400	4800	5500	5500
Max. input speed			n_{1max}	rpm	6000	6000	6000	6000	6000	6000	6000	6000	6000
Mean no load running torque (with n_1=3000 rpm and 20°C gearhead temperature) [c]			T_{012}	Nm	0.5	0.4	0.4	0.3	0.3	0.3	0.3	0.3	0.2
				in.lb	4.4	3.5	3.5	2.7	2.7	2.7	2.7	2.7	1.8
Max. torsional backlash			j_t	arcmin	Standard ≤ 6 / Reduced ≤ 4								
Torsional rigidity			C_{t21}	Nm/ arcmin	3.5								
				in.lb/ arcmin	31.0								
Max. axial force [d]			F_{2AMax}	N	2400								
				lb_f	540								
Max. radial force [d]			F_{2RMax}	N	2700								
				lb_f	608								
Max. tilting moment			M_{2KMax}	Nm	152								
				in.lb	1345								
Efficiency at full load			η	%	94								
Service life (For calculation, see the Chapter "Information")			L_h	h	> 20000								
Weight incl. standard adapter plate			m	kg	2.0								
				lb_m	4.4								
Operating noise (with n_1=3000 rpm no load)			L_{PA}	dB(A)	≤ 64								
Max. permitted housing temperature				°C	+90								
				F	194								
Ambient temperature				°C	0 to +40								
				F	32 to 104								
Lubrication					Lubricated for life								
Paint					Blue RAL 5002								
Direction of rotation					Motor and gearhead same direction								
Protection class					IP 65								
Moment of inertia (relates to the drive)	B	11	J_1	kgcm²	0.077	0.069	0.068	0.061	0.061	0.057	0.057	0.056	0.056
				10^{-3} in.lb.s²	0.068	0.061	0.060	0.054	0.054	0.050	0.050	0.050	0.050
Clamping hub diameter [mm]	C	14	J_1	kgcm²	0.17	0.16	0.16	0.16	0.16	0.15	0.15	0.15	0.15
				10^{-3} in.lb.s²	0.15	0.15	0.14	0.14	0.14	0.14	0.13	0.13	0.13

[a] Other ratios available on request
[b] For higher ambient temperatures, please reduce input speed
[c] Valid for clamping hub diameter of 11 mm
[d] Refers to center of the output shaft or flange

View A | View B

Motor shaft diameter [mm]

up to 11 [4] (B) clamping hub diameter

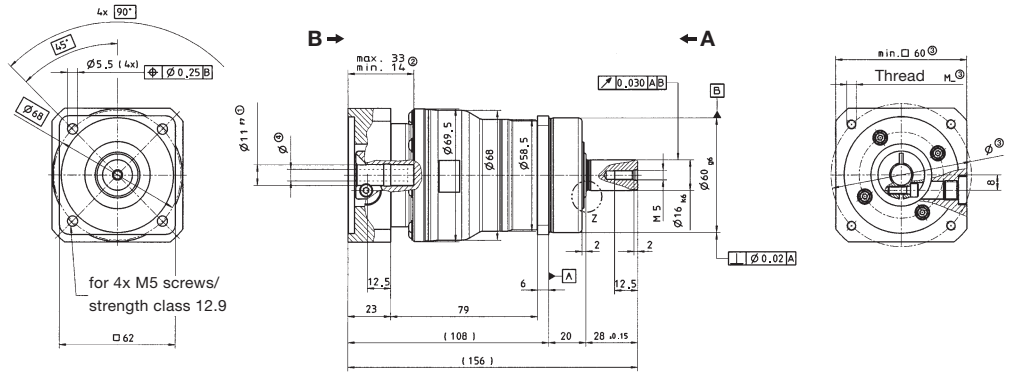

up to 14 [4] (C) clamping hub diameter

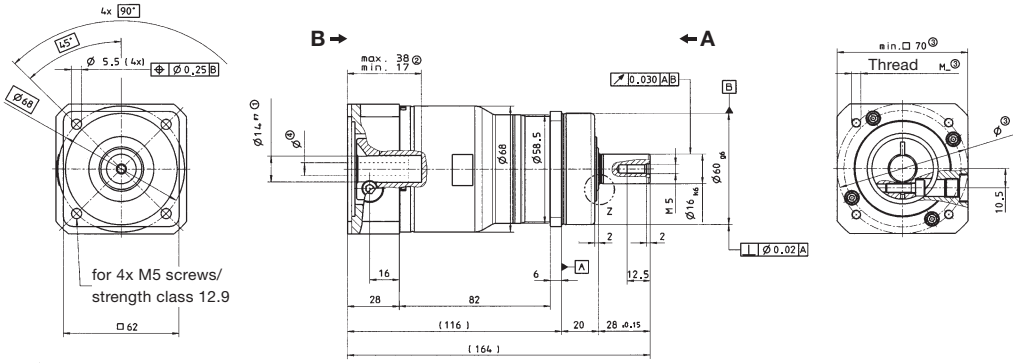

Z: Detail

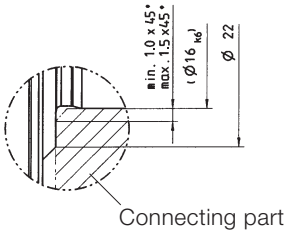

Alternatives: Output shaft variants

Keywayed output shaft in mm
E = key as per DIN 6885, sheet 1, form A

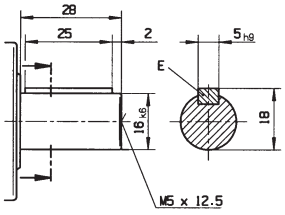

Involute gearing DIN 5480 in mm
X = W 16 x 0.8 x 30 x 18 x 6m, DIN 5480

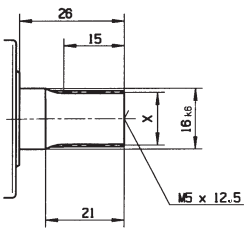

Non-tolerated dimensions ± 1 mm

1) Check motor shaft fit.
2) Min./Max. permissible motor shaft length. Longer motor shafts are adaptable, please contact us.
3) The dimensions depend on the motor.
4) Smaller motor shaft diameter is compensated by a bushing with a minimum thickness of 1 mm.

⚠ Motor mounting according to operating manual

SP+ 075 MF 1-stage

					1-stage				
Ratio [a]			***i***		**3**	**4**	**5**	**7**	**10**
cymex®-optimized acceleration torque (please contact us regarding the design)			T_{2Bcym}	Nm	–	135	150	135	95
				in.lb	–	1195	1328	1195	841
Max. acceleration torque (max. 1000 cycles per hour)			T_{2B}	Nm	85	110	110	110	90
				in.lb	752	974	974	974	797
Nominal output torque (with n_{1N})			T_{2N}	Nm	47	75	75	75	52
				in.lb	416	664	664	664	460
Emergency stop torque (permitted 1000 times during the service life of the gearhead)			T_{2Not}	Nm	200	250	250	250	200
				in.lb	1770	2213	2213	2213	1770
Nominal input speed (with T_{2N} and 20°C ambient temperature) [b]			n_{1N}	rpm	2900	2900	2900	3100	3100
Max. input speed			n_{1Max}	rpm	6000	6000	6000	6000	6000
Mean no load running torque (with n_1=3000 rpm and 20°C gearhead temperature) [c]			T_{012}	Nm	1.8	1.4	1.1	0.8	0.6
				in.lb	15.9	12.4	9.7	7.1	5.3
Max. torsional backlash			j_t	arcmin	Standard ≤ 4 / Reduced ≤ 2				
Torsional rigidity			C_{t21}	Nm/ arcmin	10				
				in.lb/ arcmin	89				
Max. axial force [d]			F_{2AMax}	N	3350				
				lb_f	754				
Max. radial force [d]			F_{2RMax}	N	4000				
				lb_f	900				
Max. tilting moment			M_{2KMax}	Nm	236				
				in.lb	2089				
Efficiency at full load			η	%	97				
Service life (For calculation, see the Chapter "Information")			L_h	h	> 20000				
Weight incl. standardadapter plate			m	kg	3.9				
				lb_m	8.6				
Operating noise (with n_1=3000 rpm no load)			L_{PA}	dB(A)	≤ 64				
Max. permitted housing temperature				°C	+90				
				F	194				
Ambient temperature				°C	0 to +40				
				F	32 to 104				
Lubrication					Lubricated for life				
Paint					Blue RAL 5002				
Direction of rotation					Motor and gearhead same direction				
Protection class					IP 65				
Moment of inertia (relates to the drive)	C	14	J_1	kgcm²	0.86	0.61	0.51	0.42	0.38
				10^{-3} in.lb.s²	0.76	0.54	0.46	0.37	0.33
Clamping hub diameter [mm]	E	19	J_1	kgcm²	1.03	0.78	0.68	0.59	0.54
				10^{-3} in.lb.s²	0.91	0.69	0.60	0.52	0.48
	G	24	J_1	kgcm²	2.40	2.15	2.05	1.96	1.91
				10^{-3} in.lb.s²	2.12	1.90	1.81	1.73	1.69

[a] Other ratios available on request
[b] For higher ambient temperatures, please reduce input speed
[c] Valid for clamping hub diameter of 19 mm
[d] Refers to centre of the output shaft or flange

View A | View B

Motor shaft diameter [mm]

up to 14 [4] (C) clamping hub diameter

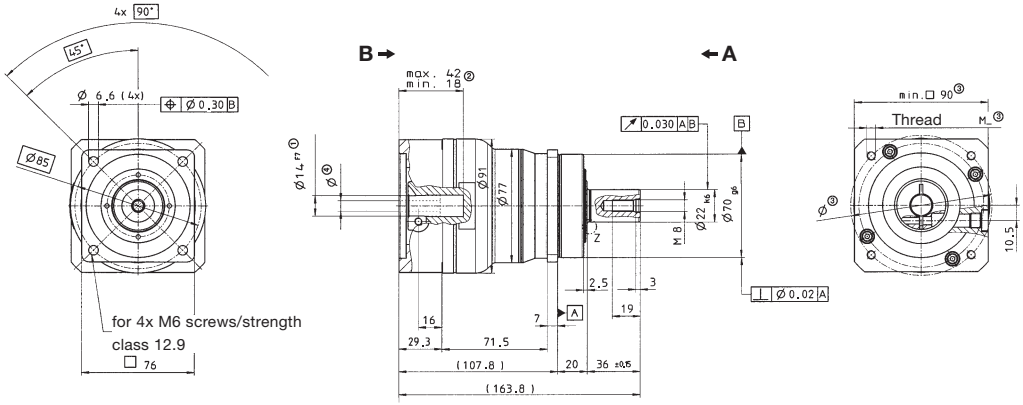

up to 19 [4] (E) clamping hub diameter

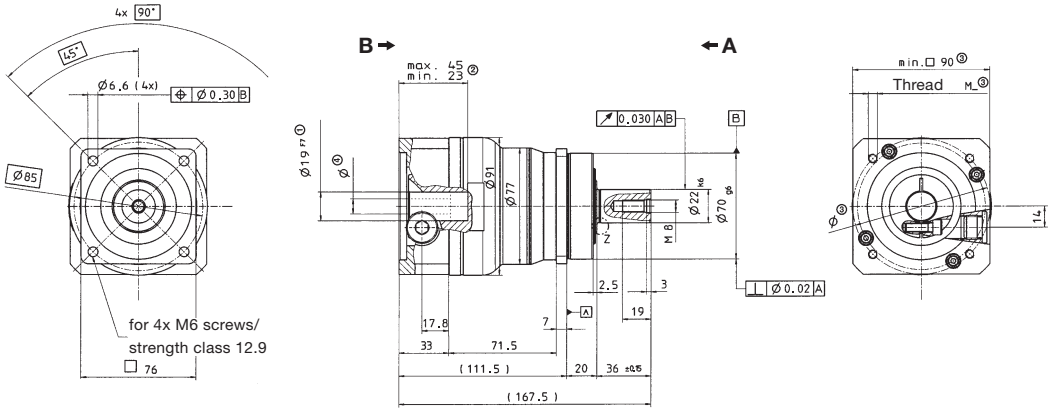

up to 24 [4] (G) clamping hub diameter

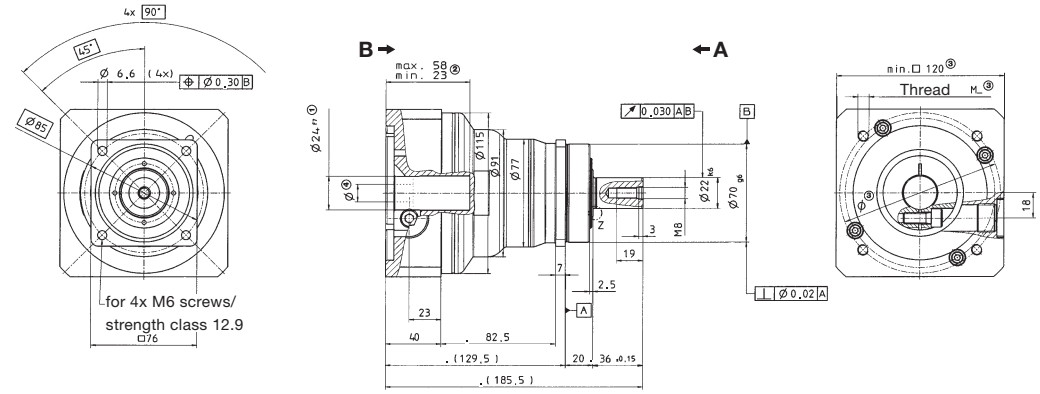

Alternatives: Output shaft variants

Keywayed output shaft in mm

E = key as per DIN 6885, sheet 1, form A

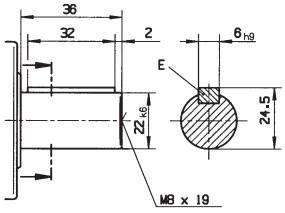

Involute gearing DIN 5480 in mm

X = W 22 x 1.25 x 30 x 16 x 6m, DIN 5480

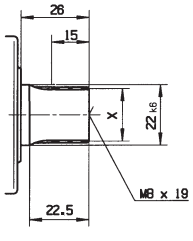

Z: Detail

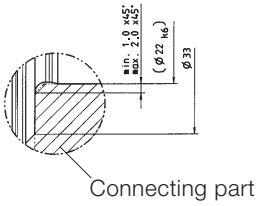

Non-tolerated dimensions ± 1 mm

1) Check motor shaft fit.
2) Min./Max. permissible motor shaft length. Longer motor shafts are adaptable, please contact us.
3) The dimensions depend on the motor.
4) Smaller motor shaft diameter is compensated by a bushing with a minimum thickness of 1 mm.

⚠ Motor mounting according to operating manual

					2-stage								
Ratio [a]			*i*		**16**	**20**	**25**	**28**	**35**	**40**	**50**	**70**	**100**
cymex®-optimized acceleration torque (please contact us regarding the design)			T_{2Bcym}	Nm	135	135	150	135	150	135	150	135	95
				in.lb	1195	1195	1328	1195	1328	1195	1328	1195	841
Max. acceleration torque (max. 1000 cycles per hour)			T_{2B}	Nm	110	110	110	110	110	110	110	110	90
				in.lb	974	974	974	974	974	974	974	974	797
Nominal output torque (with n_{1N})			T_{2N}	Nm	75	75	75	75	75	75	75	75	52
				in.lb	664	664	664	664	664	664	664	664	460
Emergency stop torque (permitted 1000 times during the service life of the gearhead)			T_{2Not}	Nm	250	250	250	250	250	250	250	250	200
				in.lb	2213	2213	2213	2213	2213	2213	2213	2213	1770
Nominal input speed (with T_{2N} and 20°C ambient temperature) [b]			n_{1N}	rpm	3500	3500	3500	3500	3500	3500	3800	4500	4500
Max. input speed			n_{1Max}	rpm	6000	6000	6000	6000	6000	6000	6000	6000	6000
Mean no load running torque (with n_1 = 3000 rpm and 20°C gearhead temperature) [c]			T_{012}	Nm	0.8	0.6	0.6	0.5	0.4	0.4	0.3	0.3	0.3
				in.lb	4.4	3.5	3.5	2.7	2.7	1.8	1.8	1.8	1.8
Max. torsional backlash			j_t	arcmin	Standard ≤ 6 / Reduced ≤ 4								
Torsional rigidity			C_{t21}	Nm/ arcmin	10								
				in.lb/ arcmin	89								
Max. axial force [d]			F_{2AMax}	N	3350								
				lb_f	754								
Max. radial force [d]			F_{2RMax}	N	4000								
				lb_f	900								
Max. tilting moment			M_{2KMax}	Nm	236								
				in.lb	2089								
Efficiency at full load			η	%	94								
Service life (For calculation, see the Chapter "Information")			L_h	h	> 20000								
Weight incl. standard adapter plate			*m*	kg	3.6								
				lb_m	8.0								
Operating noise (with n_1 = 3000 rpm no load)			L_{PA}	dB(A)	≤ 64								
Max. permitted housing temperature				°C	+90								
				F	194								
Ambient temperature				°C	0 to +40								
				F	32 to 104								
Lubrication					Lubricated for life								
Paint					Blue RAL 5002								
Direction of rotation					Motor and gearhead same direction								
Protection class					IP 65								
Moment of inertia (relates to the drive)	B	11	J_1	kgcm²	0.16	0.13	0.13	0.10	0.10	0.091	0.090	0.089	0.089
				10^{-3} in.lb.s²	0.14	0.11	0.11	0.092	0.090	0.081	0.080	0.079	0.079
Clamping hub diameter [mm]	C	14	J_1	kgcm²	0.23	0.20	0.20	0.18	0.18	0.17	0.16	0.16	0.16
				10^{-3} in.lb.s²	0.20	0.18	0.18	0.16	0.16	0.15	0.15	0.14	0.14
	E	19	J_1	kgcm²	0.55	0.53	0.52	0.50	0.50	0.49	0.49	0.49	0.49
				10^{-3} in.lb.s²	0.49	0.47	0.46	0.44	0.44	0.43	0.43	0.43	0.43

[a] Other ratios available on request
[b] For higher ambient temperatures, please reduce input speed
[c] Valid for clamping hub diameter of 14 mm
[d] Refers to centre of the output shaft or flange

Motor shaft diameter [mm]

	View A	View B
up to 11 [4] (B) clamping hub diameter	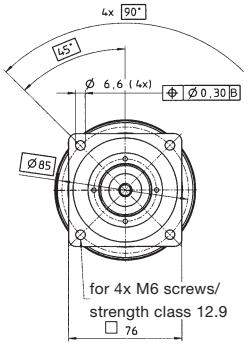	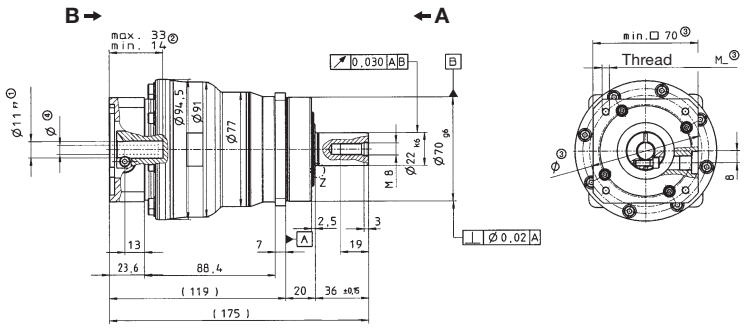
up to 14 [4] (C) clamping hub diameter	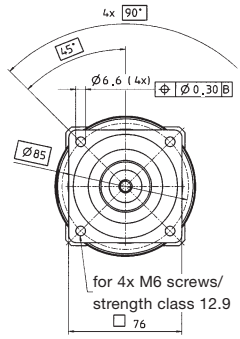	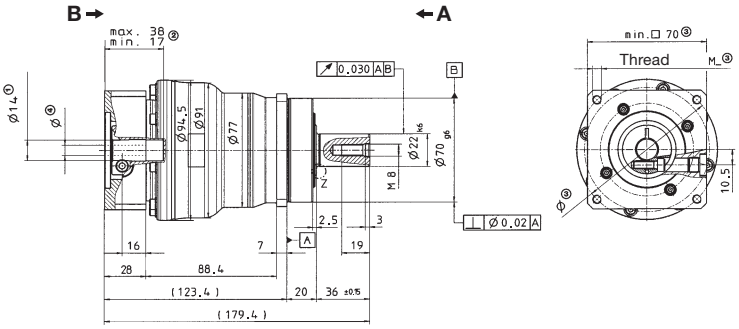
up to 19 [4] (E) clamping hub diameter	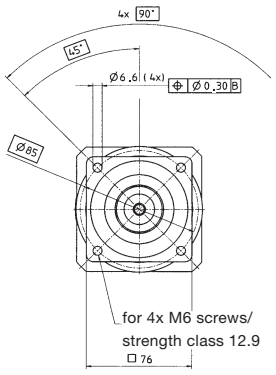	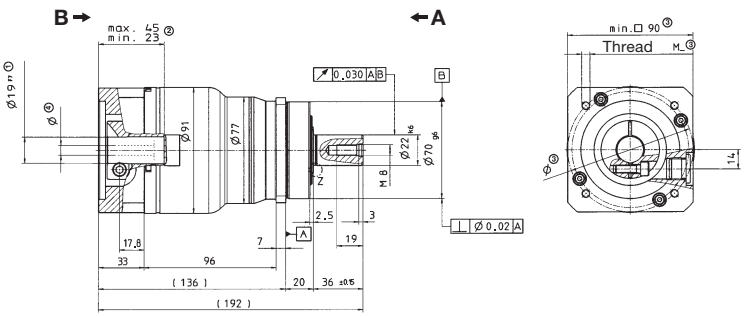

Alternatives: Output shaft variants

Keywayed output shaft in mm
E = key as per DIN 6885, sheet 1, form A

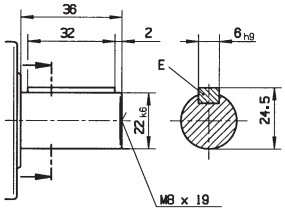

Involute gearing DIN 5480 in mm
X = W 22 x 1.25 x 30 x 16 x 6m, DIN 5480

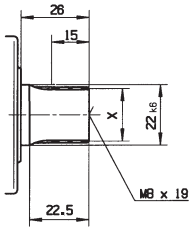

Z: Detail

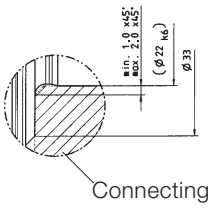

Non-tolerated dimensions ± 1 mm

1) Check motor shaft fit.
2) Min./Max. permissible motor shaft length. Longer motor shafts are adaptable, please contact us.
3) The dimensions depend on the motor.
4) Smaller motor shaft diameter is compensated by a bushing with a minimum thickness of 1 mm.

⚠ Motor mounting according to operating manual

					1-stage				
Ratio [a]			***i***		**3**	**4**	**5**	**7**	**10**
cymex®-optimized acceleration torque (please contact us regarding the design)			T_{2Bcym}	Nm	–	350	380	315	250
				in.lb	–	3098	3363	2788	2213
Max. acceleration torque (max. 1000 cycles per hour)			T_{2B}	Nm	225	300	300	300	225
				in.lb	1991	2655	2655	2655	1991
Nominal output torque (with n_{1N})			T_{2N}	Nm	120	180	175	170	120
				in.lb	1062	1593	1549	1505	1062
Emergency stop torque (permitted 1000 times during the service life of the gearhead)			T_{2Not}	Nm	500	625	625	625	500
				in.lb	4425	5531	5531	5531	4425
Nominal input speed (with T_{2N} and 20°C ambient temperature) [b]			n_{1N}	rpm	2500	2500	2500	2800	2800
Max. input speed			n_{1Max}	rpm	4500	4500	4500	4500	4500
Mean no load running torque (with n_1 = 3000 rpm and 20°C gearhead temperature) [c]			T_{012}	Nm	3.5	2.7	2.4	1.6	1.4
				in.lb	31.0	23.9	21.2	14.2	12.4
Max. torsional backlash			j_t	arcmin	Standard ≤ 3 / Reduced ≤ 1				
Torsional rigidity			C_{t21}	Nm/ arcmin	31				
				in.lb/ arcmin	274				
Max. axial force [d]			F_{2AMax}	N	5650				
				lb_f	1271				
Max. radial force [d]			F_{2RMax}	N	6300				
				lb_f	1418				
Max. tilting moment			M_{2KMax}	Nm	487				
				in.lb	4310				
Efficiency at full load			η	%	97				
Service life (For calculation, see the Chapter "Information")			L_h	h	> 20000				
Weight incl. standard adapter plate			*m*	kg	7.7				
				lb_m	17.0				
Operating noise (with n_1 = 3000 rpm no load i = 4)			L_{PA}	dB(A)	≤ 66				
Max. permitted housing temperature				°C	+90				
				F	17.0				
Ambient temperature				°C	0 to +40				
				F	32 to 104				
Lubrication					Lubricated for life				
Paint					Blue RAL 5002				
Direction of rotation					Motor and gearhead same direction				
Protection class					IP 65				
Moment of inertia (relates to the drive)	E	19	J_1	kgcm²	3.29	2.35	1.92	1.60	1.38
				10^{-3} in.lb.s²	2.91	2.08	1.70	1.42	1.22
Clamping hub diameter [mm]	G	24	J_1	kgcm²	3.99	3.04	2.61	2.29	2.07
				10^{-3} in.lb.s²	3.53	2.69	2.31	2.03	1.83
	H	28	J_1	kgcm²	3.01	2.53	2.17	1.89	1.68
				10^{-3} in.lb.s²	2.66	2.24	1.92	1.67	1.48
	K	38	J_1	kgcm²	11.1	10.1	9.68	9.36	9.14
				10^{-3} in.lb.s²	9.78	8.95	8.57	8.28	8.09

[a] Other ratios available on request
[b] For higher ambient temperatures, please reduce input speed
[c] Valid for clamping hub diameter of 24 mm
[d] Refers to centre of the output shaft or flange

Motor shaft diameter [mm]

	View A	View B
up to 19 [4] (E) clamping hub diameter	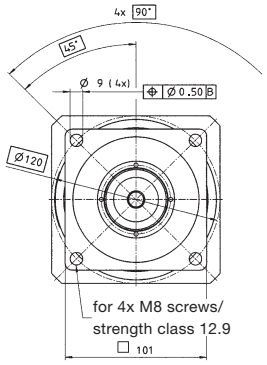	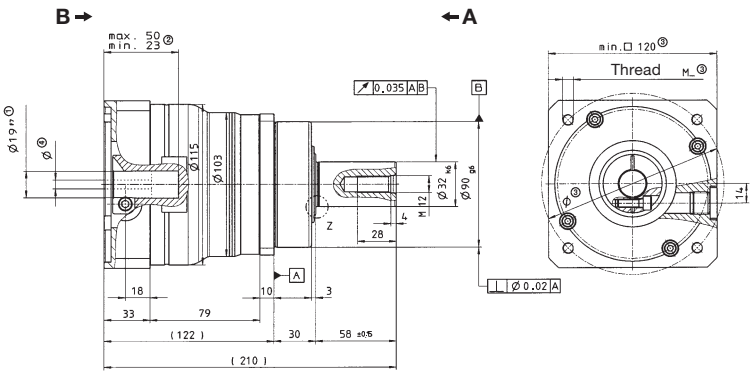
up to 24/28 [4] (G/H) clamping hub diameter	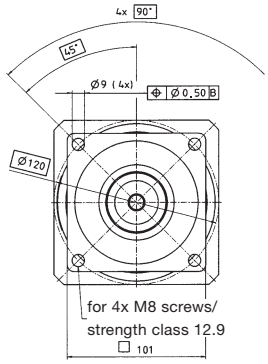	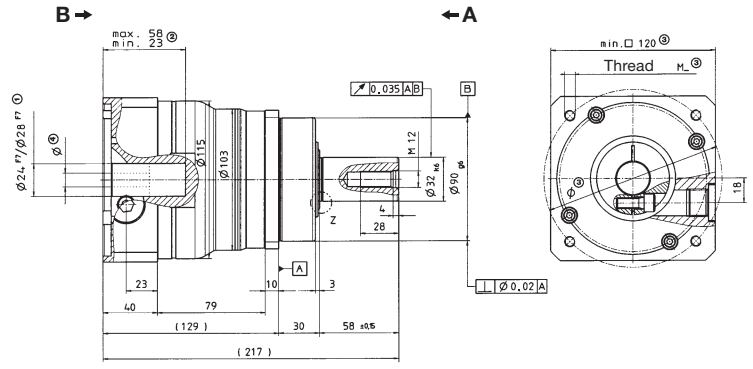
up to 38 [4] (K) clamping hub diameter	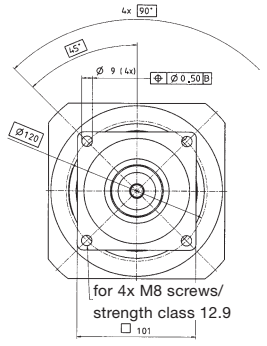	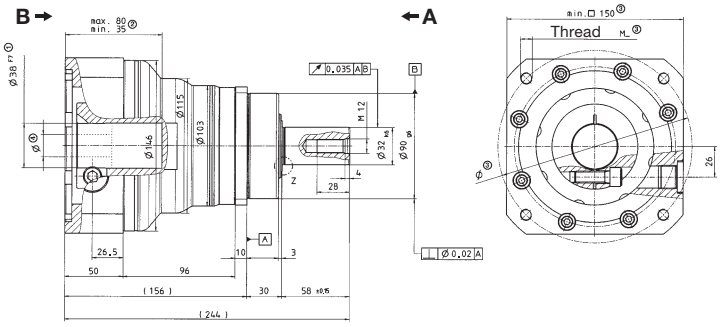

Alternatives: Output shaft variants

Keywayed output shaft in mm
E = key as per DIN 6885, sheet 1, form A

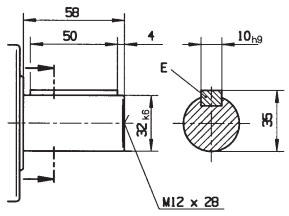

Involute gearing DIN 5480 in mm
X = W 32 x 1.25 x 30 x 24 x 6m, DIN 5480

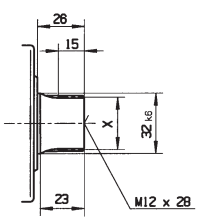

Z: Detail

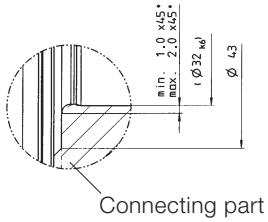

Non-tolerated dimensions ± 1 mm

1) Check motor shaft fit.
2) Min./Max. permissible motor shaft length. Longer motor shafts are adaptable, please contact us.
3) The dimensions depend on the motor.
4) Smaller motor shaft diameter is compensated by a bushing with a minimum thickness of 1 mm.

⚠ Motor mounting according to operating manual

					2-stage								
Ratio [a]			***i***		**16**	**20**	**25**	**28**	**35**	**40**	**50**	**70**	**100**
cymex®-optimized acceleration torque (please contact us regarding the design)			T_{2Bcym}	Nm	350	350	380	350	380	350	380	315	250
				in.lb	3098	3098	3363	3098	3363	3098	3363	2788	2213
Max. acceleration torque (max. 1000 cycles per hour)			T_{2B}	Nm	300	300	300	300	300	300	300	300	225
				in.lb	2655	2655	2655	2655	2655	2655	2655	2655	1991
Nominal output torque (with n_{1N})			T_{2N}	Nm	180	180	175	180	175	180	175	170	120
				in.lb	1593	1593	1549	1593	1549	1593	1549	1505	1062
Emergency stop torque (permitted 1000 times during the service life of the gearhead)			T_{2Not}	Nm	625	625	625	625	625	625	625	625	500
				in.lb	5531	5531	5531	5531	5531	5531	5531	5531	4425
Nominal input speed (with T_{2N} and 20°C ambient temperature) [b]			n_{1N}	rpm	3100	3100	3100	3100	3100	3100	3500	4200	4200
Max. input speed			n_{1Max}	rpm	4500	4500	4500	4500	4500	4500	4500	4500	4500
Mean no load running torque (with n_1 = 3000 rpm and 20°C gearhead temperature) [c]			T_{012}	Nm	1.5	1.2	1.1	0.9	0.8	0.7	0.6	0.5	0.5
				in.lb	7.1	6.2	5.3	4.4	3.5	3.5	2.7	2.7	2.7
Max. torsional backlash			j_t	arcmin	Standard ≤ 5 / Reduced ≤ 3								
Torsional rigidity			C_{t21}	Nm/ arcmin	31								
				in.lb/ arcmin	274								
Max. axial force [d]			F_{2AMax}	N	5650								
				lb_f	1271								
Max. radial force [d]			F_{2RMax}	N	6300								
				lb_f	1418								
Max. tilting moment			M_{2KMax}	Nm	487								
				in.lb	4310								
Efficiency at full load			η	%	94								
Service life (For calculation, see the Chapter "Information")			L_h	h	> 20000								
Weight incl. standardadapter plate			*m*	kg	7.9								
				lb_m	17.5								
Operating noise (with n_1 = 3000 rpm no load)			L_{PA}	dB(A)	≤ 64								
Max. permitted housing temperature				°C	+90								
				F	194								
Ambient temperature				°C	0 to +40								
				F	32 to 104								
Lubrication					Lubricated for life								
Paint					Blue RAL 5002								
Direction of rotation					Motor and gearhead same direction								
Protection class					IP 65								
Moment of inertia (relates to the drive)	C	14	J_1	kgcm²	0.64	0.54	0.52	0.43	0.43	0.38	0.38	0.37	0.37
				10^{-3} in.lb.s²	0.57	0.47	0.46	0.38	0.38	0.34	0.33	0.33	0.33
Clamping hub diameter [mm]	E	19	J_1	kgcm²	0.81	0.70	0.69	0.60	0.59	0.55	0.54	0.54	0.54
				10^{-3} in.lb.s²	0.72	0.62	0.61	0.53	0.52	0.48	0.48	0.48	0.47
	G	24	J_1	kgcm²	2.18	2.07	2.05	1.97	1.96	1.92	1.91	1.91	1.91
				10^{-3} in.lb.s²	1.93	1.83	1.82	1.74	1.74	1.70	1.69	1.69	1.69

[a] Other ratios available on request
[b] For higher ambient temperatures, please reduce input speed
[c] Valid for clamping hub diameter of 19 mm
[d] Refers to centre of the output shaft or flange

Motor shaft diameter [mm]

	View A	View B
up to 14 [4] (C) clamping hub diameter	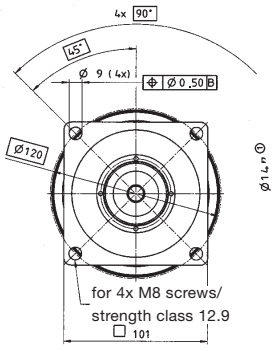	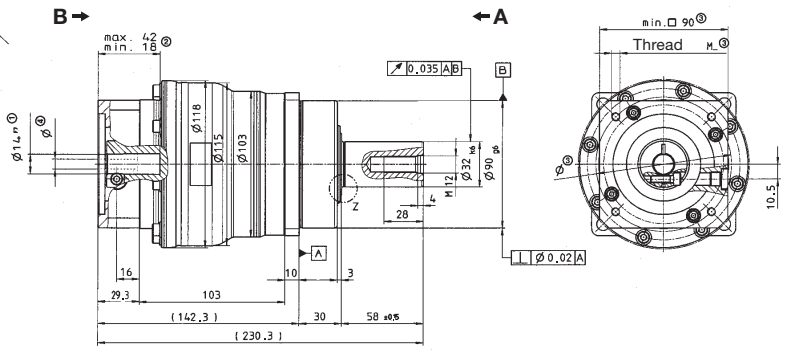
up to 19 [4] (E) clamping hub diameter	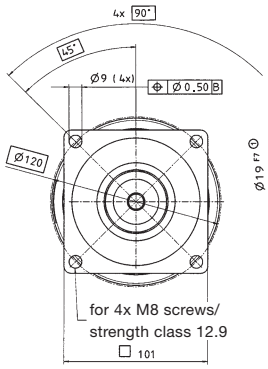	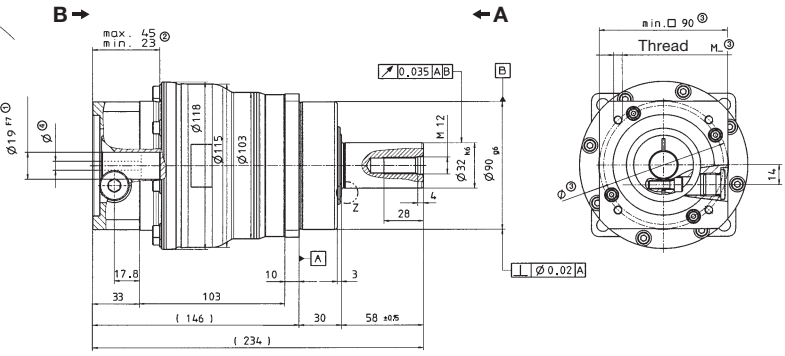
up to 24 [4] (G) clamping hub diameter	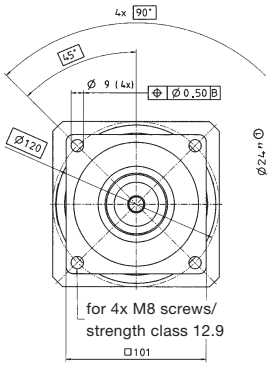	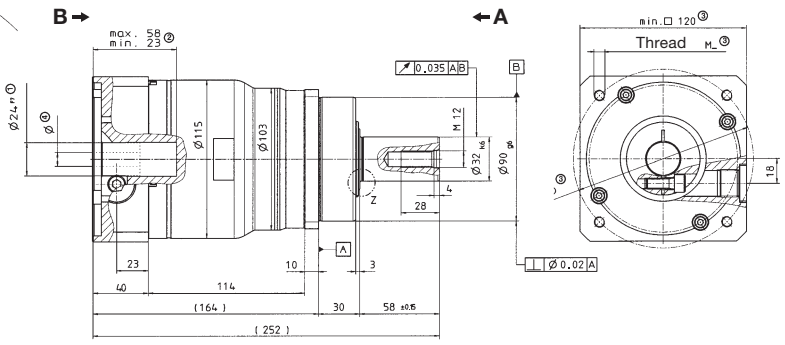

Alternatives: Output shaft variants

Keywayed output shaft in mm

E = key as per DIN 6885, sheet 1, form A

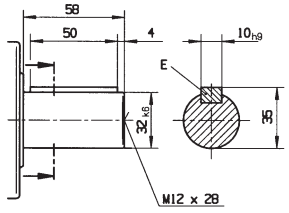

Involute gearing DIN 5480 in mm

X = W 32 x 1.25 x 30 x 24 x 6m, DIN 5480

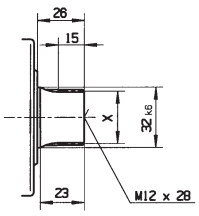

Z: Detail

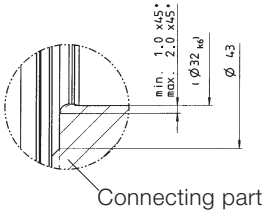

Non-tolerated dimensions ± 1 mm

1) Check motor shaft fit.
2) Min./Max. permissible motor shaft length. Longer motor shafts are adaptable, please contact us.
3) The dimensions depend on the motor.
4) Smaller motor shaft diameter is compensated by a bushing with a minimum thickness of 1 mm.

⚠ Motor mounting according to operating manual

					1-stage				
Ratio [a]			***i***		**3**	**4**	**5**	**7**	**10**
cymex®-optimized acceleration torque (please contact us regarding the design)			T_{2Bcym}	Nm	–	675	720	630	540
				in.lb	–	5974	6372	5576	4779
Max. acceleration torque (max. 1000 cycles per hour)			T_{2B}	Nm	390	600	600	600	480
				in.lb	3451,5	5310	5310	5310	4248
Nominal output torque (with n_{1N})			T_{2N}	Nm	200	360	360	360	220
				in.lb	1770	3186	3186	3186	1947
Emergency stop torque (permitted 1000 times during the service life of the gearhead)			T_{2Not}	Nm	1000	1250	1250	1250	1000
				in.lb	8850	11063	11063	11063	8850
Nominal input speed (with T_{2N} and 20°C ambient temperature) [b]			n_{1N}	rpm	2100	2100	2100	2600	2600
Max. input speed			n_{1Max}	rpm	4000	4000	4000	4000	4000
Mean no load running torque (with n_1 = 3000 rpm and 20°C gearhead temperature) [c]			T_{012}	Nm	7.6	5.8	4.7	3.4	2.5
				in.lb	67	51	42	30	22
Max. torsional backlash			j_t	arcmin	Standard ≤ 3 / Reduced ≤ 1				
Torsional rigidity			C_{t21}	Nm/ arcmin	53				
				in.lb/ arcmin	469				
Max. axial force [d]			F_{2AMax}	N	9870				
				lb_f	2221				
Max. radial force [d]			F_{2RMax}	N	9450				
				lb_f	2126				
Max. tilting moment			M_{2KMax}	Nm	952				
				in.lb	8425				
Efficiency at full load			η	%	97				
Service life (For calculation, see the Chapter "Information")			L_h	h	> 20000				
Weight incl. standard adapter plate			*m*	kg	17.2				
				lb_m	38.0				
Operating noise (with n_1 = 3000 rpm no load i = 10)			L_{PA}	dB(A)	≤ 66				
Max. permitted housing temperature				°C	+90				
				F	194				
Ambient temperature				°C	0 to +40				
				F	32 to 104				
Lubrication					Lubricated for life				
Paint					Blue RAL 5002				
Direction of rotation					Motor and gearhead same direction				
Protection class					IP 65				
Moment of inertia (relates to the drive)	G	24	J_1	kgcm²	10.7	7.82	6.79	5.84	5.28
				10^{-3} in.lb.s²	9.45	6.92	6.01	5.17	4.67
Clamping hub diameter [mm]	I	32	J_1	kgcm²	13.8	11.0	9.95	9.01	8.44
				10^{-3} in.lb.s²	12.3	9.72	8.81	7.97	7.47
	K	38	J_1	kgcm²	14.9	12.1	11.0	10.1	9.51
				10^{-3} in.lb.s²	13.2	10.7	9.76	8.92	8.42
	M	48	J_1	kgcm²	29.5	26.7	25.6	24.7	24.2
				10^{-3} in.lb.s²	26.1	23.6	22.7	21.9	21.4

[a] Other ratios available on request
[b] For higher ambient temperatures, please reduce input speed
[c] Valid for clamping hub diameter of 38 mm
[d] Refers to center of the output shaft or flange

View A | View B

Motor shaft diameter [mm]

up to 24 [4] (G) clamping hub diameter

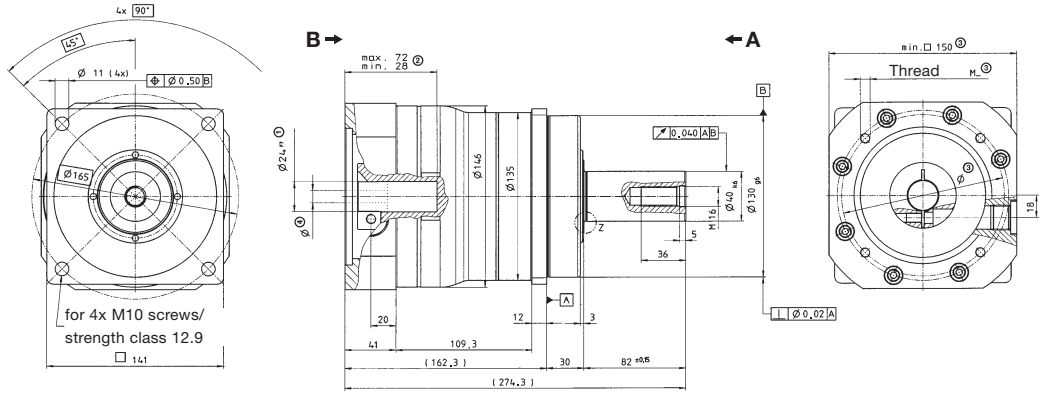

up to 32/38 [4] (I/K) clamping hub diameter

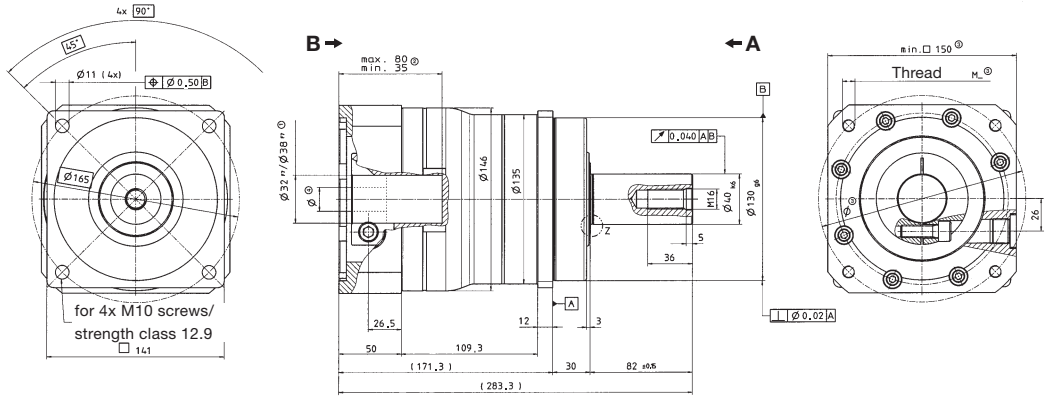

up to 48 [4] (M) clamping hub diameter

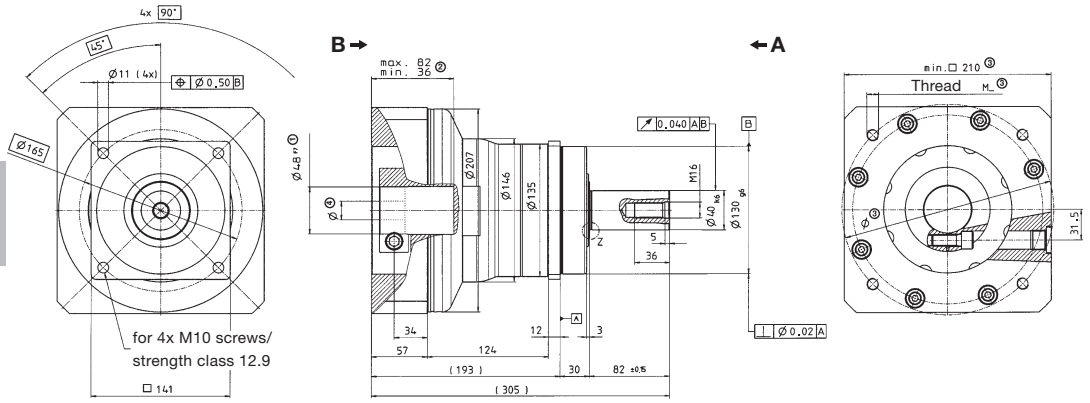

Alternatives: Output shaft variants

Keywayed output shaft in mm

E = key as per DIN 6885, sheet 1, form A

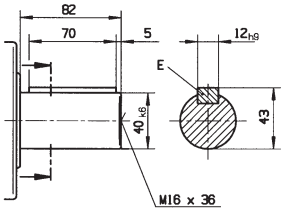

Involute gearing DIN 5480 in mm

X = W 40 x 2 x 30 x 18 x 6m, DIN 5480

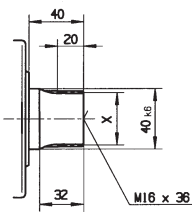

Z: Detail

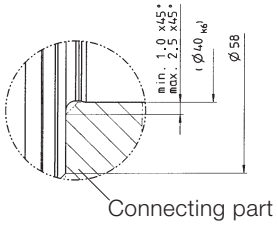

Non-tolerated dimensions ± 1 mm

1) Check motor shaft fit.
2) Min./Max. permissible motor shaft length. Longer motor shafts are adaptable, please contact us.
3) The dimensions depend on the motor.
4) Smaller motor shaft diameter is compensated by a bushing with a minimum thickness of 1 mm.

⚠ Motor mounting according to operating manual

SP+

					2-stage								
Ratio [a]			***i***		**16**	**20**	**25**	**28**	**35**	**40**	**50**	**70**	**100**
cymex®-optimized acceleration torque (please contact us regarding the design)			T_{2Bcym}	Nm	675	675	720	675	720	675	720	630	540
				in.lb	5974	5974	6372	5974	6372	5974	6372	5576	4779
Max. acceleration torque (max. 1000 cycles per hour)			T_{2B}	Nm	600	600	600	600	600	600	600	600	480
				in.lb	5310	5310	5310	5310	5310	5310	5310	5310	4248
Nominal output torque (with n_{1N})			T_{2N}	Nm	360	360	360	360	360	360	360	360	220
				in.lb	3186	3186	3186	3186	3186	3186	3186	3186	1947
Emergency stop torque (permitted 1000 times during the service life of the gearhead)			T_{2Not}	Nm	1250	1250	1250	1250	1250	1250	1250	1250	1000
				in.lb	11063	11063	11063	11063	11063	11063	11063	11063	8850
Nominal input speed (with T_{2N} and 20°C ambient temperature) [b]			n_{1N}	rpm	2900	2900	2900	2900	2900	2900	3200	3200	3900
Max. input speed			n_{1Max}	rpm	4000	4000	4000	4000	4000	4000	4000	4000	4000
Mean no load running torque (with n_1 = 3000 rpm and 20°C gearhead temperature) [c]			T_{012}	Nm	3.3	2.7	2.4	1.9	1.8	1.4	1.3	1.2	1.1
				in.lb	14.2	11.5	10.6	8.9	8.0	6.2	5.3	4.4	4.4
Max. torsional backlash			j_t	arcmin	Standard ≤ 5 / Reduced ≤ 3								
Torsional rigidity			C_{t21}	Nm/ arcmin	53								
				in.lb/ arcmin	469								
Max. axial force [d]			F_{2AMax}	N	9870								
				lb_f	2221								
Max. radial force [d]			F_{2RMax}	N	9450								
				lb_f	2126								
Max. tilting moment			M_{2KMax}	Nm	952								
				in.lb	8425								
Efficiency at full load			η	%	94								
Service life (For calculation, see the Chapter "Information")			L_h	h	> 20000								
Weight incl. standard adapter plate			*m*	kg	17								
				lb_m	37.6								
Operating noise (with n_1 = 3000 rpm no load)			L_{PA}	dB(A)	≤ 65								
Max. permitted housing temperature				°C	+90								
				F	194								
Ambient temperature				°C	0 to +40								
				F	32 to 104								
Lubrication					Lubricated for life								
Paint					Blue RAL 5002								
Direction of rotation					Motor and gearhead same direction								
Protection class					IP 65								
Moment of inertia (relates to the drive)	E	19	J_1	kgcm²	2.50	2.01	1.97	1.65	1.63	1.40	1.39	1.38	1.38
				10^{-3} in.lb.s²	2.21	1.78	1.75	1.46	1.44	1.24	1.23	1.22	1.22
Clamping hub diameter [mm]	G	24	J_1	kgcm²	3.19	2.71	2.67	2.34	2.32	2.10	2.08	2.08	2.07
				10^{-3} in.lb.s²	2.82	2.40	2.36	2.07	2.05	1.85	1.85	1.84	1.83
	K	38	J_1	kgcm²	10.3	9.77	9.73	9.41	9.39	9.16	9.15	9.14	9.14
				10^{-3} in.lb.s²	9.07	8.65	8.61	8.33	8.31	8.11	8.10	8.09	8.09

[a] Other ratios available on request
[b] For higher ambient temperatures, please reduce input speed
[c] Valid for clamping hub diameter of 24 mm
[d] Refers to center of the output shaft or flange

View A | View B

Motor shaft diameter [mm]

up to 19 [4] (E) clamping hub diameter

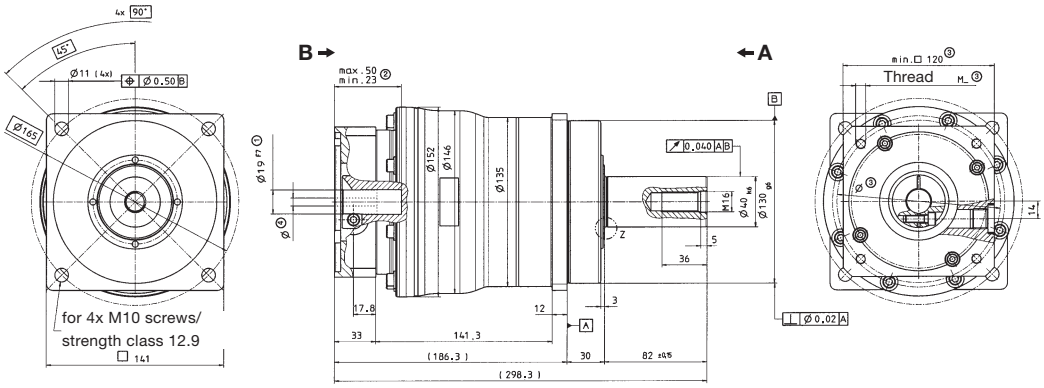

up to 24 [4] (G) clamping hub diameter

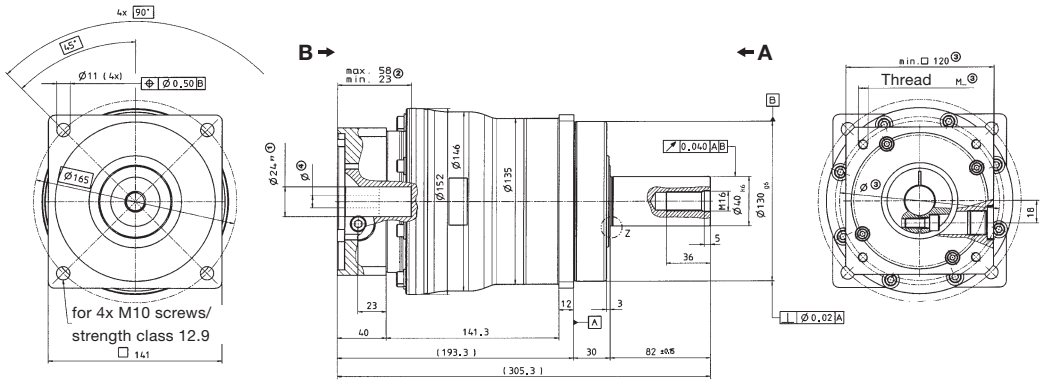

up to 38 [4] (K) clamping hub diameter

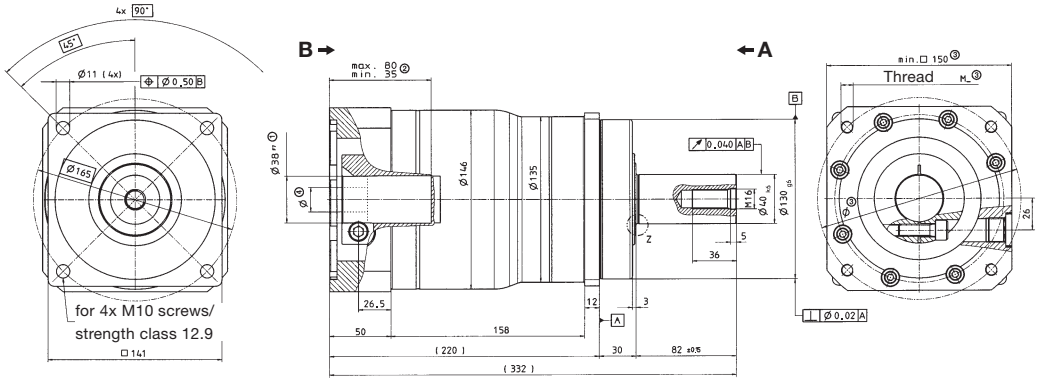

Alternatives: Output shaft variants

Keywayed output shaft in mm
E = key as per DIN 6885, sheet 1, form A

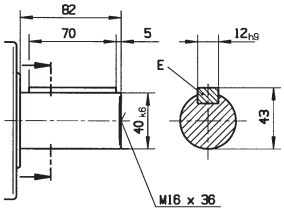

Involute gearing DIN 5480 in mm
X = W 40 x 2 x 30 x 18 x 6m, DIN 5480

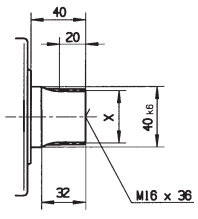

Z: Detail

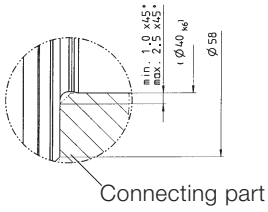

Non-tolerated dimensions ± 1 mm

1) Check motor shaft fit.
2) Min./Max. permissible motor shaft length. Longer motor shafts are adaptable, please contact us.
3) The dimensions depend on the motor.
4) Smaller motor shaft diameter is compensated by a bushing with a minimum thickness of 1 mm.

⚠ Motor mounting according to operating manual

				1-stage				
Ratio [a]			***i***	**3**	**4**	**5**	**7**	**10**
cymex®-optimized acceleration torque (please contact us regarding the design)			T_{2Bcym} Nm	900	1700	1800	1700	1350
			in.lb	7965	15045	15930	15045	11948
Max. acceleration torque (max. 1000 cycles per hour)			T_{2B} Nm	880	1100	1100	1100	880
			in.lb	7788	9735	9735	9735	7788
Nominal output torque (with n_{1N})			T_{2N} Nm	530	750	750	750	750
			in.lb	4691	6638	6638	6638	6638
Emergency stop torque (permitted 1000 times during the service life of the gearhead)			T_{2Not} Nm	2200	2750	2750	2750	2200
			in.lb	19470	24338	24338	24338	29470
Nominal input speed (with T_{2N} and 20°C ambient temperature) [b]			n_{1N} rpm	1500	1500	1500	2300	2300
Max. input speed			n_{1Max} rpm	3500	3500	3500	3500	3500
Mean no load running torque (with n_1 = 3000 rpm and 20°C gearhead temperature) [c]			T_{012} Nm	14.0	11.0	9.0	6.8	5.0
			in.lb	123.9	97.4	79.7	60.2	44.3
Max. torsional backlash			j_t arcmin	Standard ≤ 3 / Reduced ≤ 1				
Torsional rigidity			C_{t21} Nm/ arcmin	175				
			in.lb/ arcmin	1549				
Max. axial force [d]			F_{2AMax} N	14150				
			lb_f	3184				
Max. radial force [d]			F_{2RMax} N	14700				
			lb_f	3308				
Max. tilting moment			M_{2KMax} Nm	1600				
			in.lb	14160				
Efficiency at full load			η %	97				
Service life (For calculation, see the Chapter "Information")			L_h h	> 20000				
Weight incl. standard adapter plate			m kg	34				
			lb_m	75.1				
Operating noise (with n_1 = 3000 rpm no load i = 10)			L_{PA} dB(A)	≤ 66				
Max. permitted housing temperature			°C	+90				
			F	194				
Ambient temperature			°C	0 to +40				
			F	32 to 104				
Lubrication				Lubricated for life				
Paint				Blue RAL 5002				
Direction of rotation				Motor and gearhead same direction				
Protection class				IP 65				
Moment of inertia (relates to the drive)	K	38	J_1 kgcm²	50.8	33.9	27.9	22.2	19.2
			10^{-3} in.lb.s²	45.0	30.0	24.7	19.7	17.0
Clamping hub diameter [mm]	M	48	J_1 kgcm²	58.2	41.2	35.3	29.6	26.5
			10^{-3} in.lb.s²	51.5	36.5	31.2	26.2	23.5

[a] Other ratios available on request
[b] For higher ambient temperatures, please reduce input speed
[c] Valid for clamping hub diameter of 48 mm
[d] Refers to center of the output shaft or flange

View A | View B

Motor shaft diameter [mm]

up to 38 [4] (K) clamping hub diameter

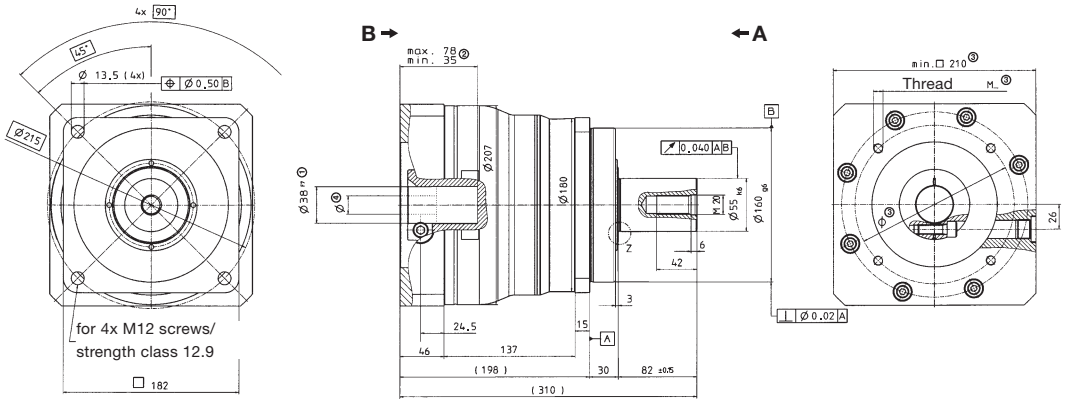

up to 48 [4] (M) clamping hub diameter

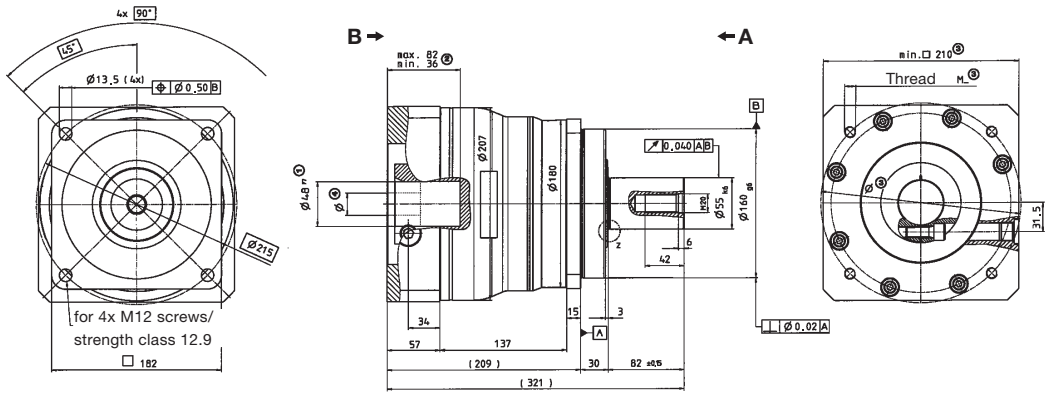

Z: Detail

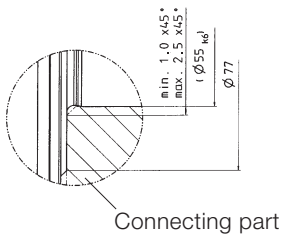

Alternatives: Output shaft variants

Keywayed output shaft in mm
E = key as per DIN 6885, sheet 1, form A

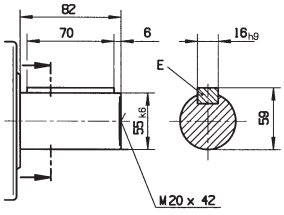

Involute gearing DIN 5480 in mm
X = W 55 x 2 x 30 x 26 x 6m, DIN 5480

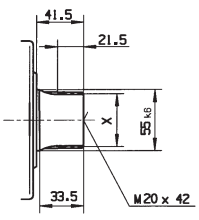

Non-tolerated dimensions ± 1 mm

1) Check motor shaft fit.
2) Min./Max. permissible motor shaft length. Longer motor shafts are adaptable, please contact us.
3) The dimensions depend on the motor.
4) Smaller motor shaft diameter is compensated by a bushing with a minimum thickness of 1 mm.

⚠ Motor mounting according to operating manual

					2-stage								
Ratio [a]			***i***		**16**	**20**	**25**	**28**	**35**	**40**	**50**	**70**	**100**
cymex®-optimized acceleration torque (please contact us regarding the design)			T_{2Bcym}	Nm	1700	1700	1800	1700	1800	1700	1800	1700	1350
				in.lb	15045	15045	15930	15045	15930	15045	15930	15045	11948
Max. acceleration torque (max. 1000 cycles per hour)			T_{2B}	Nm	1100	1100	1100	1100	1100	1100	1100	1100	880
				in.lb	9735	9735	9735	9735	9735	9735	9735	9735	7788
Nominal output torque (with n_{1N})			T_{2N}	Nm	750	750	750	750	750	750	750	750	750
				in.lb	6638	6638	6638	6638	6638	6638	6637	6638	6638
Emergency stop torque (permitted 1000 times during the service life of the gearhead)			T_{2Not}	Nm	2750	2750	2750	2750	2750	2750	2750	2750	2200
				in.lb	24338	24338	24338	24338		24338	24338	24338	19470
Nominal input speed (with T_{2N} and 20°C ambient temperature) [b]			n_{1N}	rpm	2700	2700	2700	2700	2700	2700	2900	3200	3400
Max. input speed			n_{1Max}	rpm	4000	4000	4000	4000	4000	4000	4000	4000	4000
Mean no load running torque (with n_1 = 3000 rpm and 20°C gearhead temperature) [c]			T_{012}	Nm	5.3	4.3	3.9	3.1	2.8	2.3	2.1	1.9	1.7
				in.lb	28.3	23.0	20.4	16.8	15.0	12.4	10.6	8.9	8.0
Max. torsional backlash			j_t	arcmin	Standard ≤ 5 / Reduced ≤ 3								
Torsional rigidity			C_{t21}	Nm/ arcmin	175								
				in.lb/ arcmin	1549								
Max. axial force [d]			F_{2AMax}	N	14150								
				lb_f	3184								
Max. radial force [d]			F_{2RMax}	N	14700								
				lb_f	3308								
Max. tilting moment			M_{2KMax}	Nm	1600								
				in.lb	14160								
Efficiency at full load			η	%	94								
Service life (For calculation, see the Chapter "Information")			L_h	h	> 20000								
Weight incl. standard adapter plate			m	kg	36.4								
				lb_m	80.4								
Operating noise (with n_1 = 3000 rpm no load)			L_{PA}	dB(A)	≤ 66								
Max. permitted housing temperature				°C	+90								
				F	194								
Ambient temperature				°C	0 to +40								
				F	32 to 104								
Lubrication					Lubricated for life								
Paint					Blue RAL 5002								
Direction of rotation					Motor and gearhead same direction								
Protection class					IP 65								
Moment of inertia (relates to the drive)	G	24	J_1	kgcm²	9.27	7.72	7.48	6.32	6.20	5.51	5.45	5.39	5.36
				10^{-3} in.lb.s²	8.20	6.83	6.62	5.59	5.49	4.88	4.82	4.77	4.74
Clamping hub diameter [mm]	I	32	J_1	kgcm²	12.4	10.9	10.6	9.48	9.36	8.67	8.61	8.55	8.52
				10^{-3} in.lb.s²	11.0	9.63	9.42	8.39	8.28	7.67	7.62	7.57	7.54
	K	38	J_1	kgcm²	13.5	12.0	11.7	10.6	10.4	9.74	9.68	9.63	9.60
				10^{-3} in.lb.s²	12.0	10.6	10.4	9.34	9.23	8.62	8.57	8.52	8.49
	M	48	J_1	kgcm²	28.1	26.6	26.3	25.2	25.1	24.4	24.3	24.3	24.3
				10^{-3} in.lb.s²	24.9	23.5	23.3	22.3	22.2	21.6	21.5	21.5	21.5

[a] Other ratios available on request
[b] For higher ambient temperatures, please reduce input speed
[c] Valid for clamping hub diameter of 38 mm
[d] Refers to center of the output shaft or flange

View A | View B

Motor shaft diameter [mm]

up to 24 [4] (G) clamping hub diameter

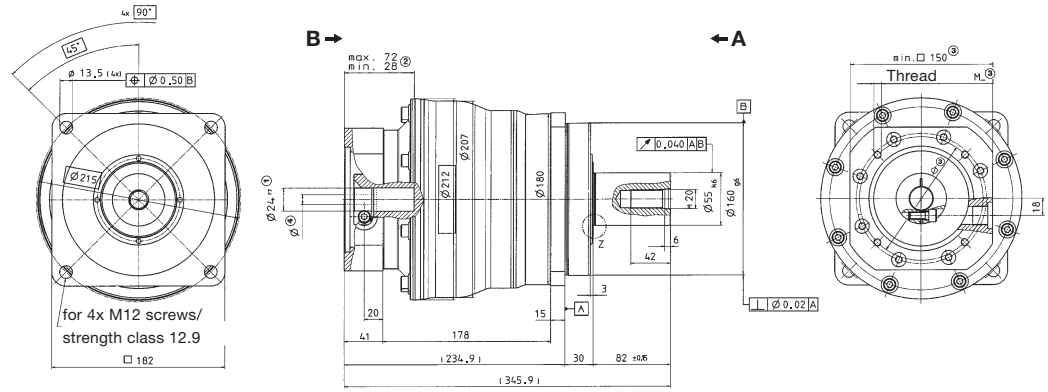

up to 32/38 [4] (I/K) clamping hub diameter

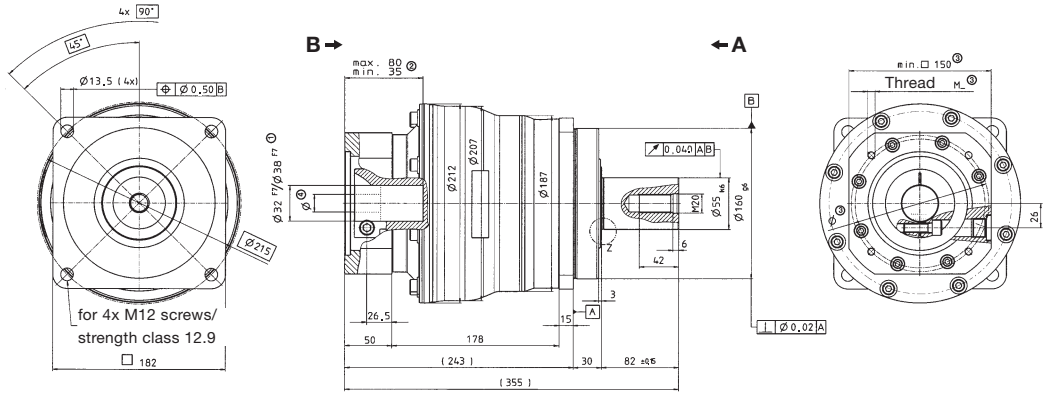

up to 48 [4] (M) clamping hub diameter

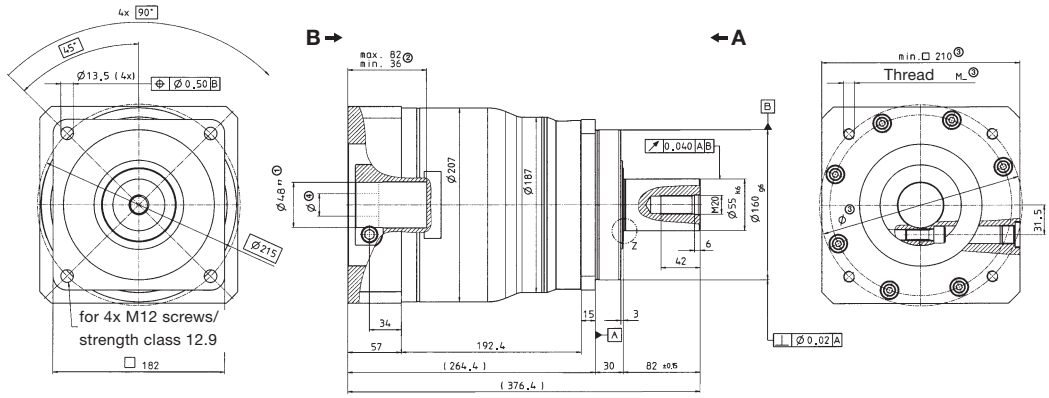

Alternatives: Output shaft variants

Keywayed output shaft in mm
E = key as per DIN 6885, sheet 1, form A

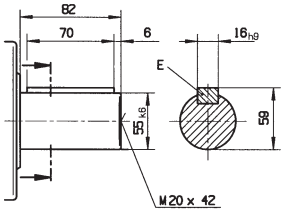

Involute gearing DIN 5480 in mm
X = W 55 x 2 x 30 x 26 x 6m, DIN 5480

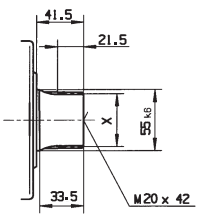

Z: Detail

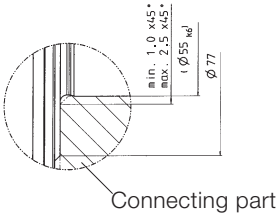

Non-tolerated dimensions ± 1 mm

1) Check motor shaft fit.
2) Min./Max. permissible motor shaft length. Longer motor shafts are adaptable, please contact us.
3) The dimensions depend on the motor.
4) Smaller motor shaft diameter is compensated by a bushing with a minimum thickness of 1 mm.

⚠ Motor mounting according to operating manual

SP+ 210 MF 1/2-stage

				1-stage					2-stage								
Ratio [a]			***i***	**3**	**4**	**5**	**7**	**10**	**16**	**20**	**25**	**28**	**35**	**40**	**50**	**70**	**100**
cymex®-optimized acceleration torque (please contact us regarding the design)			T_{2Bcym}	Nm	- Please contact us -												
				in.lb													
Max. acceleration torque (max. 1000 cycles per hour)			T_{2B}	Nm	1600	2500	2500	2400	1900	2400	2500	2500	2400	2400	2400	2400	2400	1900
				in.lb	14160	22125	22125	21240	16815	21240	22125	22125	21240	21240	21240	21240	21240	16815
Nominal output torque (with n_{1N})			T_{2N}	Nm	1100	1500	1500	1400	1000	1500	1500	1500	1500	1500	1500	1500	1400	1000
				in.lb	9735	13275	13275	12390	8850	13275	13275	13275	13275	13275	13275	13275	12390	8850
Emergency stop torque (permitted 1000 times during the service life of the gearhead)			T_{2Not}	Nm	5000	5200	5200	5200	5000	5200	5200	5200	5200	5200	5200	5200	5200	5000
				in.lb	44250	46020	46020	46020	44250	46020	46020	46020	46020	46020	46020	46020	46020	44250
Nominal input speed (with T_{2N} and 20°C ambient temperature) [b]			n_{1N}	rpm	1200	1200	1500	1700	2000	2500	2500	2500	2500	2500	2500	2500	3000	3000
Max. input speed			n_{1Max}	rpm	2500	2500	2500	2500	2500	3500	3500	3500	3500	3500	3500	3500	3500	3500
Mean no load running torque (with n_1 = 2000 rpm and 20°C gearhead temperature)			T_{012}	Nm	30	20	15	9.0	6.0	4.5	4.0	3.5	3.0	2.5	2.5	2.5	2.0	2.0
				in.lb	265.5	177.0	132.8	79.7	53.1	39.8	35.4	31.0	26.6	22.1	22.1	22.1	17.7	17.7
Max. torsional backlash			j_t	arcmin	Standard ≤ 3 / Reduced ≤ 1					Standard ≤ 5 / Reduced ≤ 3								
Torsional rigidity			C_{t21}	Nm/ arcmin	400					400								
				in.lb/ arcmin	3540					3540								
Max. axial force [c]			F_{2AMax}	N	30000					30000								
				lb_f	6750					6750								
Max. radial force [c]			F_{2RMax}	N	21000					21000								
				lb_f	4725					4725								
Max. tilting moment			M_{2KMax}	Nm	3100					3100								
				in.lb	27435					2744								
Efficiency at full load			η	%	97					94								
Service life (For calculation, see the Chapter "Information")			L_h	h	> 20000					> 20000								
Weight incl. standard adapter plate			m	kg	56					53								
				lb_m	124					117								
Operating noise (with n_1 = 3000 rpm no load)			L_{PA}	dB(A)	≤ 70													
Max. permitted housing temperature				°C	+90													
				F	194													
Ambient temperature				°C	0 to +40													
				F	32 to 104													
Lubrication					Lubricated for life													
Paint					Blue RAL 5002													
Direction of rotation					Motor and gearhead same direction													
Protection class					IP 65													
Moment of inertia (relates to the drive)	M	48	J_1	kgcm²	-	-	-	-	-	34.5	31.5	30.8	30.0	29.7	28.5	28.3	28.1	28.0
				10^{-3} in.lb.s²						30.5	27.9	27.3	26.6	26.3	25.2	25.0	24.9	24.8
Clamping hub diameter (mm)	N	55	J_1	kgcm²	139.0	94.3	76.9	61.5	53.1	-	-	-	-	-	-	-	-	-
				10^{-3} in.lb.s²	118.2	80.2	65.4	52.3	45.1									

[a] Other ratios available on request
[b] For higher ambient temperatures, please reduce input speed
[c] Refers to center of the output shaft or flange

View A | View B

Motor shaft diameter [mm]

up to 55 [4] (N) clamping hub diameter

1-stage:

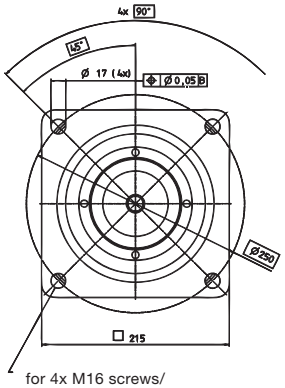

for 4x M16 screws/
strength class 12.9

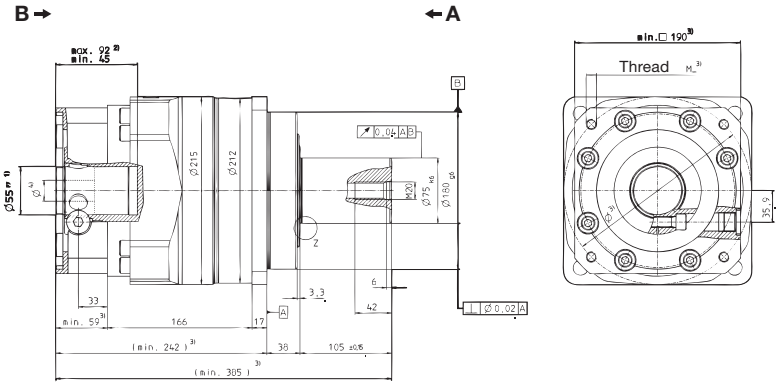

up to 48 [4] (M) clamping hub diameter

2-stage:

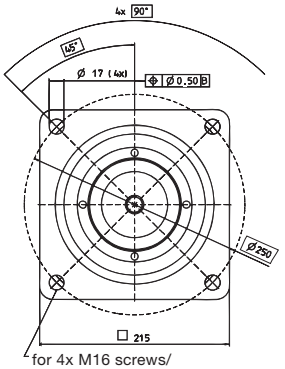

for 4x M16 screws/
strength class 12.9

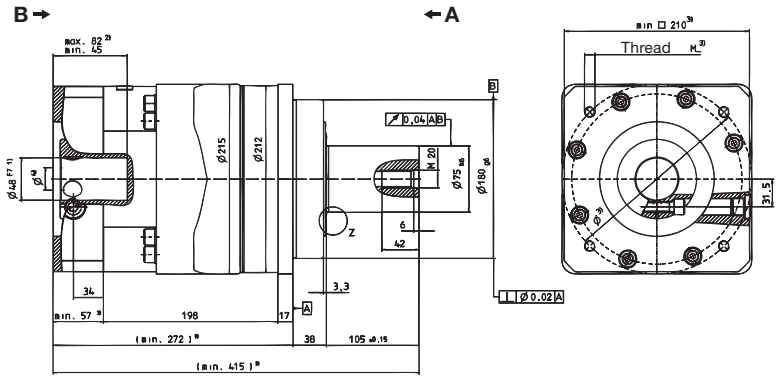

Z: Detail

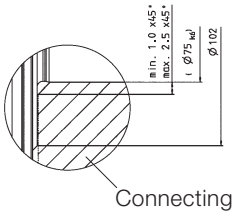

Alternatives: Output shaft variants

Keywayed output shaft in mm
E = key as per DIN 6885, sheet 1, form A

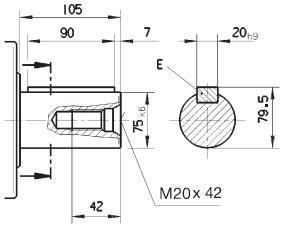

Involute gearing DIN 5480 in mm
X = W 70 x 2 x 30 x 34 x 6m, DIN 5480

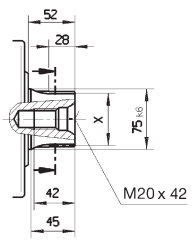

Non-tolerated dimensions ± 1.5 mm

1) Check motor shaft fit.
2) Min./Max. permissible motor shaft length. Longer motor shafts are adaptable, please contact us.
3) The dimensions depend on the motor.
4) Smaller motor shaft diameter is compensated by a bushing with a minimum thickness of 1 mm.

⚠ Motor mounting according to operating manual

SP+ 240 MF 1/2-stage

					1-stage					2-stage								
Ratio [a]			***i***		**3**	**4**	**5**	**7**	**10**	**16**	**20**	**25**	**28**	**35**	**40**	**50**	**70**	**100**
cymex®-optimized acceleration torque (please contact us regarding the design)			T_{2Bcym}	Nm	- Please contact us -													
				in.lb														
Max. acceleration torque (max. 1000 cycles per hour)			T_{2B}	Nm	2750	4500	4500	4300	3400	4500	4500	4500	4500	4500	4000	4300	4300	3400
				in.lb	24338	39825	39825	38055	30090	39825	39825	39825	39825	39825	35400	38055	38055	30090
Nominal output torque (with n_{1N})			T_{2N}	Nm	1500	2500	2500	2300	1700	2500	2500	2500	2500	2500	2500	2500	2300	1700
				in.lb	13275	22125	22125	20355	15045	22125	22125	22125	22125	22125	22125	22125	20355	15045
Emergency stop torque (permitted 1000 times during the service life of the gearhead)			T_{2Not}	Nm	6800	8500	8500	8500	6800	8500	8500	8500	8500	8500	8500	8500	8500	6800
				in.lb	60180	75225	75225	75225	60180	75225	75225	75225	75225	75225	75225	75225	75225	60180
Nominal input speed (with T_{2N} and 20°C ambient temperature) [b]			n_{1N}	rpm	1000	1000	1200	1500	1700	2300	2500	2500	2500	2500	2500	2500	2800	2800
Max. input speed			n_{1Max}	rpm	2200	2200	2200	2200	2200	3500	3500	3500	3500	3500	3500	3500	3500	3500
Mean no load running torque (with n_1 = 2000 rpm and 20°C gearhead temperature)			T_{012}	Nm	–	–	–	–	–	–	–	–	–	–	–	–	–	–
				in.lb														
Max. torsional backlash			j_t	arcmin	Standard ≤ 3 / Reduced ≤ 1					Standard ≤ 5 / Reduced ≤ 3								
Torsional rigidity			C_{t21}	Nm/ arcmin	550					550								
				in.lb/ arcmin	4868					4868								
Max. axial force [c]			F_{2AMax}	N	33000					33000								
				lb_f	7425					7425								
Max. radial force [c]			F_{2RMax}	N	30000					30000								
				lb_f	6750					6750								
Max. tilting moment			M_{2KMax}	Nm	5000					5000								
				in.lb	44250					44250								
Efficiency at full load			η	%	97					94								
Service life (For calculation, see the Chapter "Information")			L_h	h	> 20000					> 20000								
Weight incl. standard adapter plate			*m*	kg	77					76								
				lb_m	170					168								
Operating noise (with n_1 = 3000 rpm no load)			L_{PA}	dB(A)	≤ 70													
Max. permitted housing temperature				°C	+90													
				F	194													
Ambient temperature				°C	0 to +40													
				F	32 to 104													
Lubrication					Lubricated for life													
Paint					Blue RAL 5002													
Direction of rotation					Motor and gearhead same direction													
Protection class					IP 65													
Moment of inertia (relates to the drive)	M	48	J_1	kgcm²	-	-	-	-	-	39.2	34.6	33.2	30.5	29.7	28.2	27.9	27.6	27.5
				10^{-3} in.lb.s²						34.7	30.6	29.4	27.0	26.3	25.0	24.7	24.4	24.3
Clamping hub diameter [mm]	O	60	J_1	kgcm²	260.2	198.2	163.0	84.4	70.8	-	-	-	-	-	-	-	-	-
				10^{-3} in.lb.s²	230.3	175.4	144.3	74.7	62.7									

[a] Other ratios available on request
[b] For higher ambient temperatures, please reduce input speed
[c] Refers to center of the output shaft or flange

View A | View B

Motor shaft diameter [mm]

up to 60 [4] (O) clamping hub diameter

1-stage:

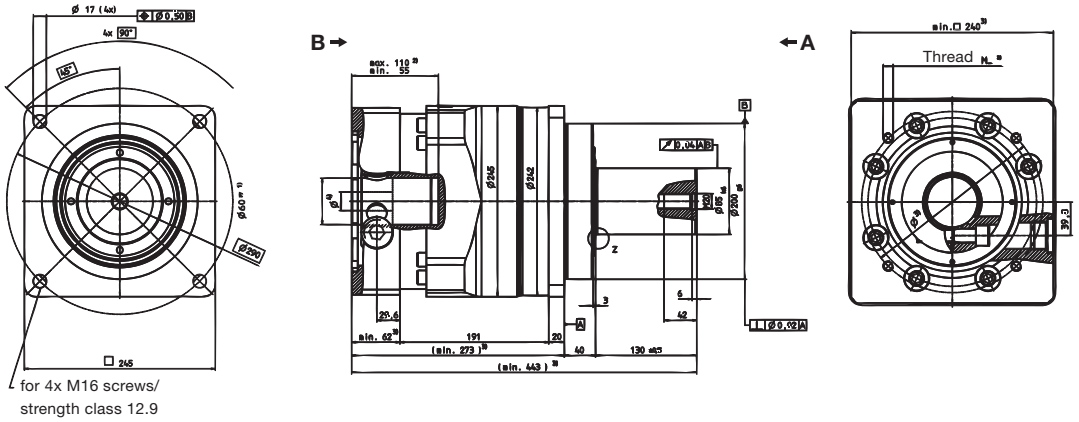

up to 48 [4] (M) clamping hub diameter

2-stage:

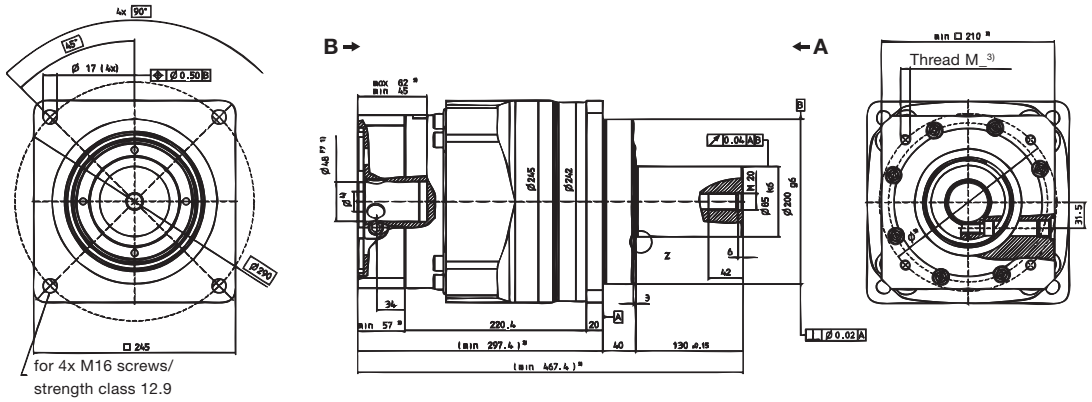

Z: Detail

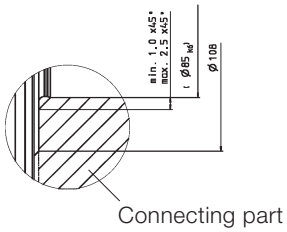

Alternatives: Output shaft variants

Keywayed output shaft in mm
E = key as per DIN 6885, sheet 1, form A

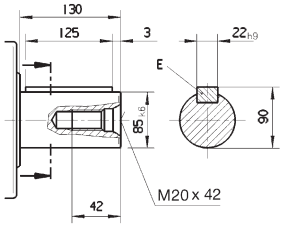

Involute gearing DIN 5480 in mm
X = W 80 x 2 x 30 x 38 x 6m, DIN 5480

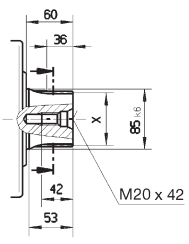

Non-tolerated dimensions ± 1.5 mm

1) Check motor shaft fit.
2) Min./Max. permissible motor shaft length. Longer motor shafts are adaptable, please contact us.
3) The dimensions depend on the motor.
4) Smaller motor shaft diameter is compensated by a bushing with a minimum thickness of 1 mm.

⚠ Motor mounting according to operating manual

SP+ 075 MC 1-stage

					1-stage				
Ratio [a]			***i***		**3**	**4**	**5**	**7**	**10**
Max. acceleration torque (max. 1000 cycles per hour)			T_{2B}	Nm	68	90	90	90	70
				in.lb	602	797	797	797	620
cymex®-optimal nominal torque (please contact us regarding the design)			T_{2Ncym}	Nm	–	60	60	60	35
				in.lb	–	531	531	531	310
Nominal output torque (with n_{1N})			T_{2N}	Nm	28	48	48	48	30
				in.lb	248	425	425	425	266
Emergency stop torque (permitted 1000 times during the service life of the gearhead)			T_{2Not}	Nm	200	250	250	250	200
				in.lb	1770	2213	2213	2213	1770
Nominal input speed (with T_{2N} and 20°C ambient temperature) [b]			n_{1N}	rpm	4500	4500	4500	4500	4500
Max. input speed			n_{1Max}	rpm	6000	6000	6000	6000	6000
Mean no load running torque (with n_1=3000 rpm and 20°C gearhead temperature) [c]			T_{012}	Nm	1.4	1.1	0.9	0.6	0.5
				in.lb	12.4	9.7	8.0	5.3	4.4
Max. torsional backlash			j_t	arcmin	Standard ≤ 6 / Reduced ≤ 4				
Torsional rigidity			C_{t21}	Nm/ arcmin	10				
				in.lb/ arcmin	89				
Max. axial force [d]			F_{2AMax}	N	3350				
				lb_f	754				
Max. radial force [d]			F_{2RMax}	N	4000				
				lb_f	900				
Max. tilting moment			M_{2KMax}	Nm	236				
				in.lb	2089				
Efficiency at full load			η	%	98.5				
Service life (For calculation, see the Chapter "Information")			L_h	h	> 30000				
Weight incl. standardadapter plate			m	kg	3.9				
				lb_m	8.6				
Operating noise (with n_1=3000 rpm no load)			L_{PA}	dB(A)	≤ 64				
Max. permitted housing temperature				°C	+90				
				F	194				
Ambient temperature				°C	0 to +40				
				F	32 to 104				
Lubrication					Lubricated for life				
Paint					Blue RAL 5002				
Direction of rotation					Motor and gearhead same direction				
Protection class					IP 65				
Moment of inertia (relates to the drive)	E	19	J_1	$kgcm^2$	1.03	0.78	0.68	0.59	0.54
				10^{-3} in.lb.s²	0.91	0.69	0.60	0.52	0.48
Clamping hub diameter [mm]	G	24	J_1	$kgcm^2$	2.40	2.15	2.05	1.96	1.91
				10^{-3} in.lb.s²	2.12	1.90	1.81	1.73	1.69

[a] Other ratios available on request
[b] For higher ambient temperatures, please reduce input speed
[c] Valid for clamping hub diameter of 19 mm
[d] Refers to centre of the output shaft or flange

View A | View B

Motor shaft diameter [mm]

up to 19 [4] (E) clamping hub diameter

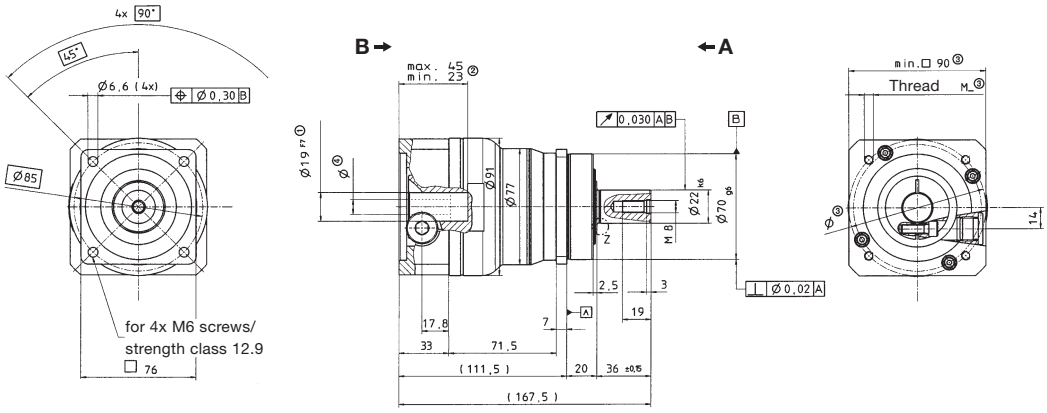

up to 24 [4] (G) clamping hub diameter

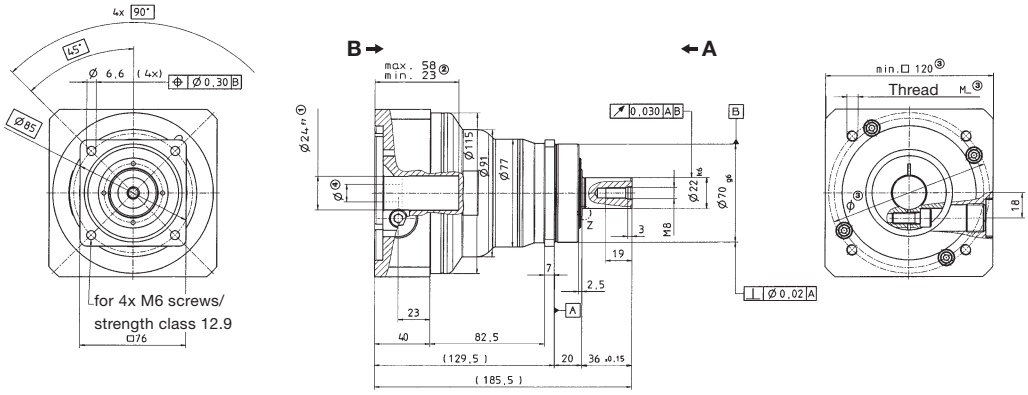

Alternatives: Output shaft variants

Keywayed output shaft in mm

E = key as per DIN 6885, sheet 1, form A

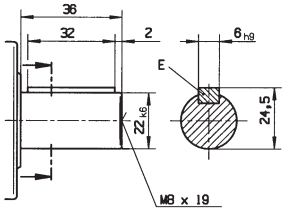

Involute gearing DIN 5480 in mm

X = W 22 x 1.25 x 30 x 16 x 6m, DIN 5480

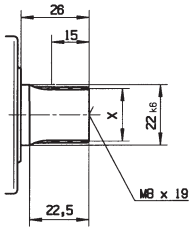

Z: Detail

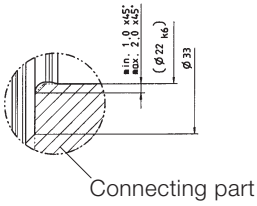

Non-tolerated dimensions ± 1 mm

1) Check motor shaft fit.
2) Min./Max. permissible motor shaft length. Longer motor shafts are adaptable, please contact us.
3) The dimensions depend on the motor.
4) Smaller motor shaft diameter is compensated by a bushing with a minimum thickness of 1 mm.

⚠ Motor mounting according to operating manual

SP+ 075 MC 2-stage

					2-stage								
Ratio [a]			***i***		**16**	**20**	**25**	**28**	**35**	**40**	**50**	**70**	**100**
Max. acceleration torque (max. 1000 cycles per hour)			T_{2B}	Nm	90	90	90	90	90	90	90	90	70
				in.lb	797	797	797	797	797	797	797	797	620
cymex®-optimal nominal torque (please contact us regarding the design)			T_{2Ncym}	Nm	–	–	–	–	–	60	–	–	35
				in.lb						531			310
Nominal output torque (with n_{1N})			T_{2N}	Nm	60	60	60	60	60	55	60	60	30
				in.lb	531	531	531	531	531	487	531	531	266
Emergency stop torque (permitted 1000 times during the service life of the gearhead)			T_{2Not}	Nm	250	250	250	250	250	250	250	250	200
				in.lb	2213	2213	2213	2213	2213	2213	2213	2213	1770
Nominal input speed (with T_{2N} and 20°C ambient temperature) [b]			n_{1N}	rpm	4500	4500	4500	4500	4500	4500	4500	4500	4500
Max. input speed			n_{1Max}	rpm	6000	6000	6000	6000	6000	6000	6000	6000	6000
Mean no load running torque (with n_1 = 3000 rpm and 20°C gearhead temperature) [c]			T_{012}	Nm	0.5	0.4	0.4	0.3	0.3	0.2	0.2	0.2	0.2
				in.lb	4.4	3.5	3.5	2.7	2.7	1.8	1.8	1.8	1.8
Max. torsional backlash			j_t	arcmin	Standard ≤ 8 / Reduced ≤ 6								
Torsional rigidity			C_{t21}	Nm/ arcmin	10								
				in.lb/ arcmin	89								
Max. axial force [d]			F_{2AMax}	N	3350								
				lb_f	754								
Max. radial force [d]			F_{2RMax}	N	4000								
				lb_f	900								
Max. tilting moment			M_{2KMax}	Nm	236								
				in.lb	2089								
Efficiency at full load			η	%	96,5								
Service life (For calculation, see the Chapter "Information")			L_h	h	> 30000								
Weight incl. standard adapter plate			m	kg	3,6								
				lb_m	8.0								
Operating noise (with n_1 = 3000 rpm no load)			L_{PA}	dB(A)	≤ 64								
Max. permitted housing temperature				°C	+90								
				F	194								
Ambient temperature				°C	0 to +40								
				F	32 to 104								
Lubrication					Lubricated for life								
Paint					Blue RAL 5002								
Direction of rotation					Motor and gearhead same direction								
Protection class					IP 65								
Moment of inertia (relates to the drive)	C	14	J_1	kgcm²	0.23	0.20	0.20	0.18	0.18	0.16	0.16	0.16	0.16
				10^{-3} in.lb.s²	0.20	0.18	0.18	0.16	0.16	0.15	0.15	0.14	0.14
Clamping hub diameter [mm]	E	19	J_1	kgcm²	0.55	0.53	0.52	0.50	0.50	0.49	0.49	0.49	0.49
				10^{-3} in.lb.s²	0.49	0.47	0.46	0.45	0.44	0.43	0.43	0.43	0.43

[a] Other ratios available on request
[b] For higher ambient temperatures, please reduce input speed
[c] Valid for clamping hub diameter of 14 mm
[d] Refers to centre of the output shaft or flange

Motor shaft diameter [mm]

	View A	View B
up to 14 [4] (C) clamping hub diameter	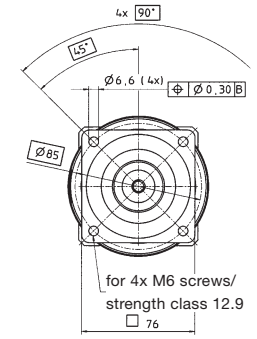	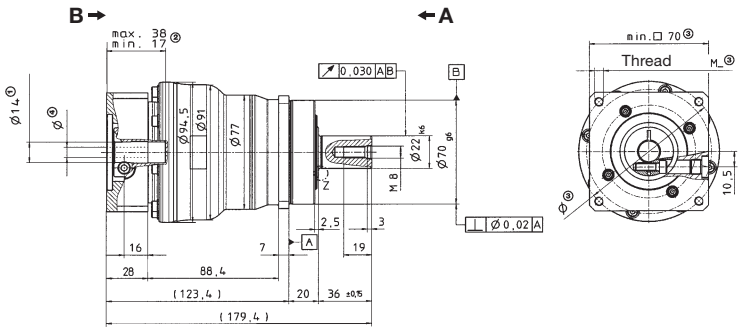
up to 19 [4] (E) clamping hub diameter	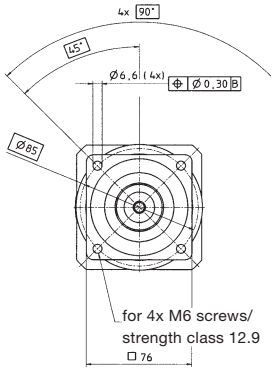	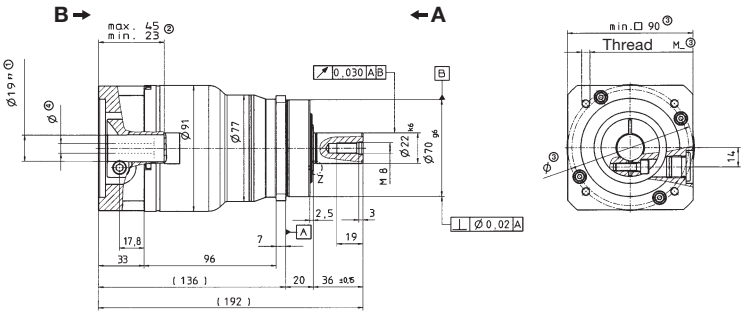

Alternatives: Output shaft variants

Keywayed output shaft in mm
E = key as per DIN 6885, sheet 1, form A

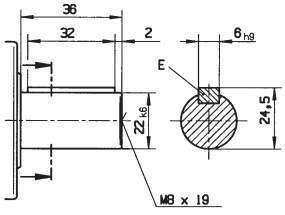

Involute gearing DIN 5480 in mm
X = W 22 x 1.25 x 30 x 16 x 6m, DIN 5480

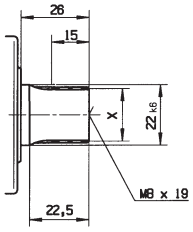

Z: Detail

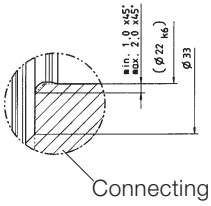

Connecting part

Non-tolerated dimensions ± 1 mm

1) Check motor shaft fit.
2) Min./Max. permissible motor shaft length. Longer motor shafts are adaptable, please contact us.
3) The dimensions depend on the motor.
4) Smaller motor shaft diameter is compensated by a bushing with a minimum thickness of 1 mm.

⚠ Motor mounting according to operating manual

					1-stage				
Ratio [a]			***i***		**3**	**4**	**5**	**7**	**10**
Max. acceleration torque (max. 1000 cycles per hour)			T_{2B}	Nm	180	240	240	240	180
				in.lb	1593	2124	2124	2124	1593
cymex®-optimal nominal torque (please contact us regarding the design)			T_{2Ncym}	Nm	95	135	135	135	90
				in.lb	841	1195	1195	1195	797
Nominal output torque (with n_{1N})			T_{2N}	Nm	70	100	105	105	80
				in.lb	620	885	929	929	708
Emergency stop torque (permitted 1000 times during the service life of the gearhead)			T_{2Not}	Nm	500	625	625	625	500
				in.lb	4425	5531	5531	5531	4425
Nominal input speed (with T_{2N} and 20°C ambient temperature) [b]			n_{1N}	rpm	3500	4000	4500	4500	4500
Max. input speed			n_{1Max}	rpm	6000	6000	6000	6000	6000
Mean no load running torque (with n_1 = 3000 rpm and 20°C gearhead temperature) [c]			T_{012}	Nm	2.4	2.1	1.8	1.1	0.8
				in.lb	21.2	18.6	15.9	9.74	7.08
Max. torsional backlash			j_t	arcmin	Standard ≤ 4 / Reduced ≤ 2				
Torsional rigidity			C_{t21}	Nm/ arcmin	31				
				in.lb/ arcmin	274				
Max. axial force [d]			F_{2AMax}	N	5650				
				lb_f	1271				
Max. radial force [d]			F_{2RMax}	N	6300				
				lb_f	1418				
Max. tilting moment			M_{2KMax}	Nm	487				
				in.lb	4310				
Efficiency at full load			η	%	98.5				
Service life (For calculation, see the Chapter "Information")			L_h	h	> 30000				
Weight incl. standard adapter plate			*m*	kg	7.7				
				lb_m	17.0				
Operating noise (with n_1 = 3000 rpm no load i = 4)			L_{PA}	dB(A)	≤ 66				
Max. permitted housing temperature				°C	+90				
				F	194				
Ambient temperature				°C	0 to +40				
				F	32 to 104				
Lubrication					Lubricated for life				
Paint					Blue RAL 5002				
Direction of rotation					Motor and gearhead same direction				
Protection class					IP 65				
Moment of inertia (relates to the drive)	G	24	J_1	kgcm²	3.99	3.04	2.61	2.29	2.07
				10^{-3} in.lb.s²	3.53	2.69	2.31	2.03	1.83
Clamping hub diameter [mm]	K	38	J_1	kgcm²	11.1	10.1	9.68	9.36	9.14
				10^{-3} in.lb.s²	9.78	8.95	8.57	8.28	8.09

[a] Other ratios available on request
[b] For higher ambient temperatures, please reduce input speed
[c] Valid for clamping hub diameter of 24 mm
[d] Refers to centre of the output shaft or flange

Motor shaft diameter [mm]

	View A	View B
up to 24 [4] (G) clamping hub diameter	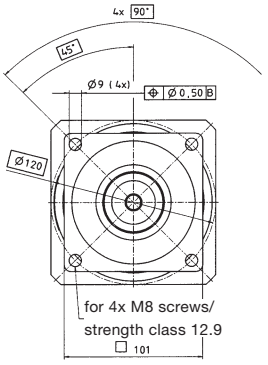	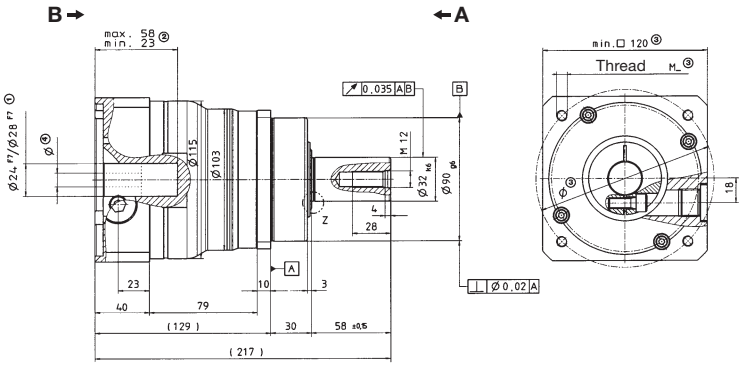
up to 38 [4] (K) clamping hub diameter	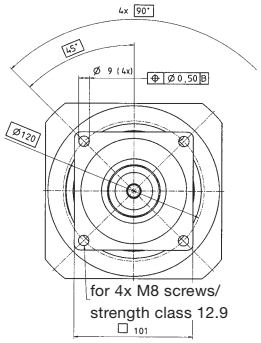	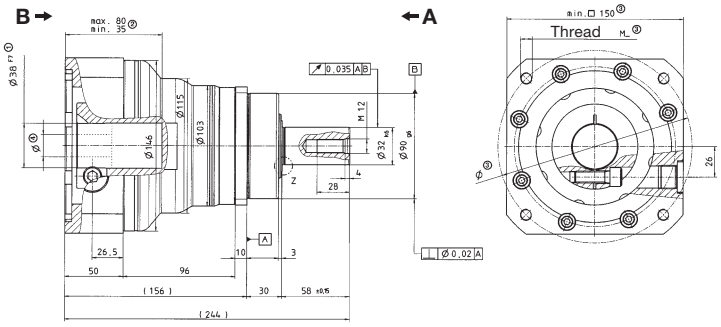

Alternatives: Output shaft variants

Keywayed output shaft in mm
E = key as per DIN 6885, sheet 1, form A

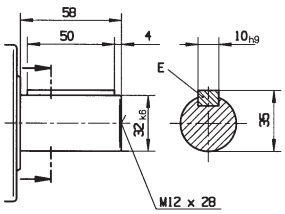

Involute gearing DIN 5480 in mm
X = W 32 x 1.25 x 30 x 24 x 6m, DIN 5480

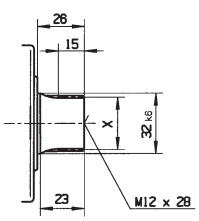

Z: Detail

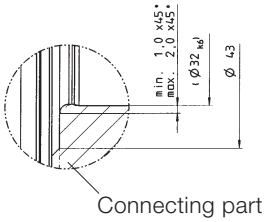

Non-tolerated dimensions ± 1 mm

1) Check motor shaft fit.
2) Min./Max. permissible motor shaft length. Longer motor shafts are adaptable, please contact us.
3) The dimensions depend on the motor.
4) Smaller motor shaft diameter is compensated by a bushing with a minimum thickness of 1 mm.

⚠ Motor mounting according to operating manual

				2-stage								
Ratio [a]			***i***	**16**	**20**	**25**	**28**	**35**	**40**	**50**	**70**	**100**
Max. acceleration torque (max. 1000 cycles per hour)			T_{2B} Nm	240	240	240	240	240	240	240	240	180
			T_{2B} in.lb	2124	2124	2124	2124	2124	2124	2124	2124	1593
cymex®-optimal nominal torque (please contact us regarding the design)			T_{2Ncym} Nm	–	–	–	–	–	–	–	–	90
			T_{2Ncym} in.lb									797
Nominal output torque (with n_{1N})			T_{2N} Nm	140	140	140	140	140	140	140	135	80
			T_{2N} in.lb	1239	1239	1239	1239	1239	1239	1239	1195	708
Emergency stop torque (permitted 1000 times during the service life of the gearhead)			T_{2Not} Nm	625	625	625	625	625	625	625	625	500
			T_{2Not} in.lb	5531	5531	5531	5531	5531	5531	5531	5531	4425
Nominal input speed (with T_{2N} and 20°C ambient temperature) [b]			n_{1N} rpm	4500	4500	4500	4500	4500	4500	4500	4500	4500
Max. input speed			n_{1Max} rpm	6000	6000	6000	6000	6000	6000	6000	6000	6000
Mean no load running torque (with n_1 = 3000 rpm and 20°C gearhead temperature) [c]			T_{012} Nm	0.8	0.7	0.6	0.5	0.4	0.4	0.3	0.3	0.3
			T_{012} in.lb	7.1	6.2	5.3	4.4	3.5	3.5	2.7	2.7	2.7
Max. torsional backlash			j_t arcmin	Standard ≤ 6 / Reduced ≤ 4								
Torsional rigidity			C_{t21} Nm/ arcmin	31								
			C_{t21} in.lb/ arcmin	274								
Max. axial force [d]			F_{2AMax} N	5650								
			F_{2AMax} lb_f	1271								
Max. radial force [d]			F_{2RMax} N	6300								
			F_{2RMax} lb_f	1418								
Max. tilting moment			M_{2KMax} Nm	487								
			M_{2KMax} in.lb	4310								
Efficiency at full load			η %	96.5								
Service life (For calculation, see the Chapter "Information")			L_h h	> 30000								
Weight incl. standardadapter plate			m kg	7.9								
			m lb_m	17.5								
Operating noise (with n_1 = 3000 rpm no load)			L_{PA} dB(A)	≤ 64								
Max. permitted housing temperature			°C	+90								
			F	194								
Ambient temperature			°C	0 to +40								
			F	32 to 104								
Lubrication				Lubricated for life								
Paint				Blue RAL 5002								
Direction of rotation				Motor and gearhead same direction								
Protection class				IP 65								
Moment of inertia (relates to the drive)	E	19	J_1 kgcm²	0.81	0.70	0.69	0.60	0.59	0.55	0.54	0.54	0.54
			J_1 10^{-3} in.lb.s²	0.72	0.62	0.61	0.53	0.52	0.48	0.48	0.48	0.47
Clamping hub diameter [mm]	G	24	J_1 kgcm²	2.18	2.07	2.05	1.97	1.96	1.92	1.91	1.91	1.91
			J_1 10^{-3} in.lb.s²	1.93	1.83	1.82	1.74	1.74	1.70	1.69	1.69	1.69

[a] Other ratios available on request
[b] For higher ambient temperatures, please reduce input speed
[c] Valid for clamping hub diameter of 19 mm
[d] Refers to centre of the output shaft or flange

Motor shaft diameter [mm]

	View A	View B
up to 19 [4] (E) clamping hub diameter	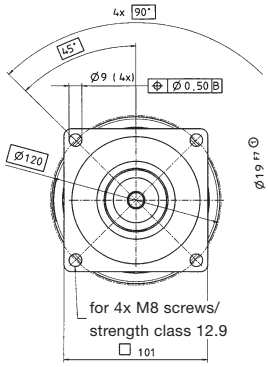	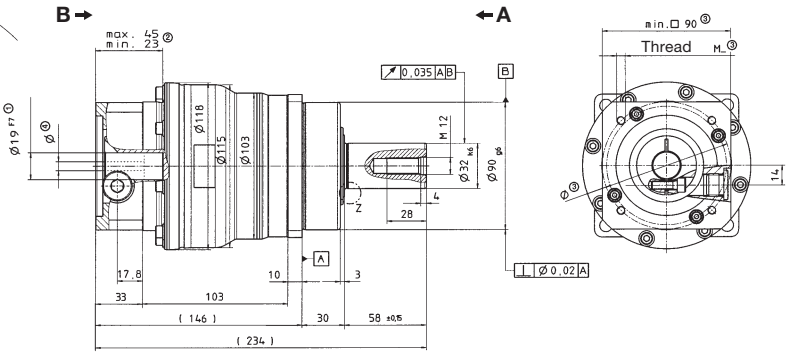
up to 24 [4] (G) clamping hub diameter	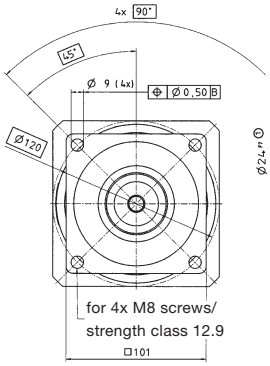	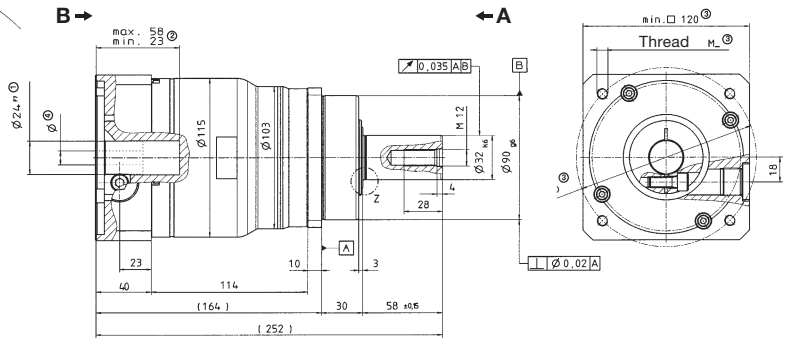

Alternatives: Output shaft variants

Keywayed output shaft in mm
E = key as per DIN 6885, sheet 1, form A

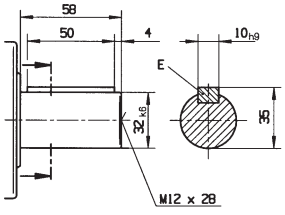

Involute gearing DIN 5480 in mm
X = W 32 x 1.25 x 30 x 24 x 6m, DIN 5480

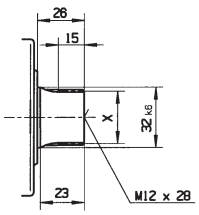

Z: Detail

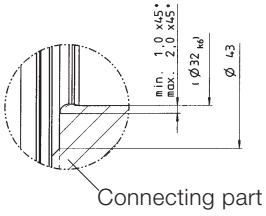

Non-tolerated dimensions ± 1 mm

1) Check motor shaft fit.
2) Min./Max. permissible motor shaft length. Longer motor shafts are adaptable, please contact us.
3) The dimensions depend on the motor.
4) Smaller motor shaft diameter is compensated by a bushing with a minimum thickness of 1 mm.

⚠ Motor mounting according to operating manual

				1-stage				
Ratio [a]			***i***	**3**	**4**	**5**	**7**	**10**
Max. acceleration torque (max. 1000 cycles per hour)			T_{2B} Nm	310	480	480	480	380
			T_{2B} in.lb	2744	4248	4248	4248	3363
cymex®-optimal nominal torque (please contact us regarding the design)			T_{2Ncym} Nm	150	240	240	270	180
			T_{2Ncym} in.lb	1328	2124	2124	2390	1593
Nominal output torque (with n_{1N})			T_{2N} Nm	130	195	205	210	160
			T_{2N} in.lb	1151	1726	1814	1859	1416
Emergency stop torque (permitted 1000 times during the service life of the gearhead)			T_{2Not} Nm	1000	1250	1250	1250	1000
			T_{2Not} in.lb	8850	11063	11063	11063	8850
Nominal input speed (with T_{2N} and 20°C ambient temperature) [b]			n_{1N} rpm	3000	3500	4500	4500	4500
Max. input speed			n_{1Max} rpm	6000	6000	6000	6000	6000
Mean no load running torque (with n_1 = 3000 rpm and 20°C gearhead temperature) [c]			T_{012} Nm	5.1	3.9	3.1	2.3	1.6
			T_{012} in.lb	45.1	34.5	27.4	20.4	14.2
Max. torsional backlash			j_t arcmin	Standard ≤ 4 / Reduced ≤ 2				
Torsional rigidity			C_{t21} Nm/ arcmin	53				
			C_{t21} in.lb/ arcmin	469				
Max. axial force [d]			F_{2AMax} N	9870				
			F_{2AMax} lb_f	2221				
Max. radial force [d]			F_{2RMax} N	9450				
			F_{2RMax} lb_f	2126				
Max. tilting moment			M_{2KMax} Nm	952				
			M_{2KMax} in.lb	8425				
Efficiency at full load			η %	98.5				
Service life (For calculation, see the Chapter "Information")			L_h h	> 30000				
Weight incl. standard adapter plate			m kg	17.2				
			m lb_m	38				
Operating noise (with n_1 = 3000 rpm no load i = 10)			L_{PA} dB(A)	≤ 66				
Max. permitted housing temperature			°C	+90				
			F	194				
Ambient temperature			°C	0 to +40				
			F	32 to 104				
Lubrication				Lubricated for life				
Paint				Blue RAL 5002				
Direction of rotation				Motor and gearhead same direction				
Protection class				IP 65				
Moment of inertia (relates to the drive)	K	38	J_1 kgcm²	14.9	12.1	11.0	10.1	9.51
Clamping hub diameter [mm]			J_1 10^{-3} in.lb.s²	13.2	10.7	9.8	8.9	8.4

[a] Other ratios available on request
[b] For higher ambient temperatures, please reduce input speed
[c] Valid for clamping hub diameter of 19 mm
[d] Refers to center of the output shaft or flange

View A | View B

Motor shaft diameter [mm]

up to 38 [4] (K) clamping hub diameter

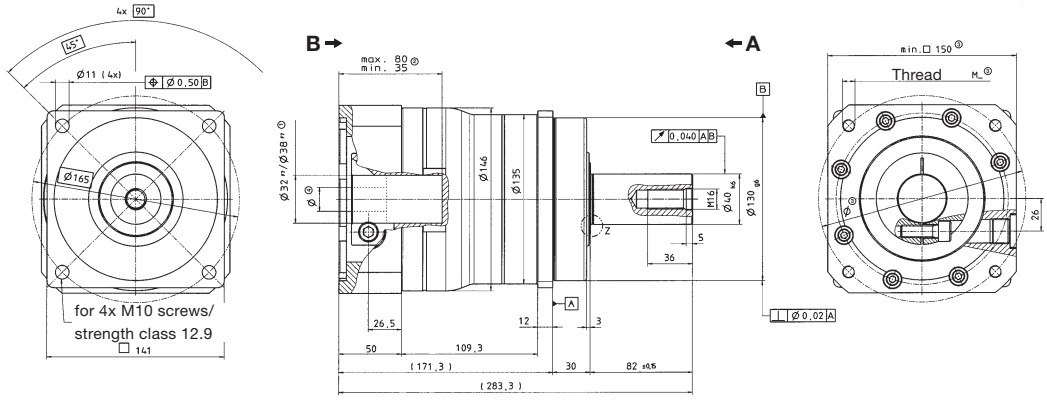

Alternatives: Output shaft variants

Keywayed output shaft in mm
E = key as per DIN 6885, sheet 1, form A

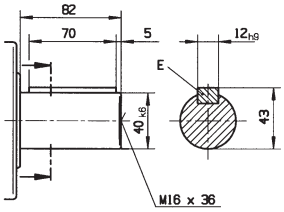

Involute gearing DIN 5480 in mm
X = W 40 x 2 x 30 x 18 x 6m, DIN 5480

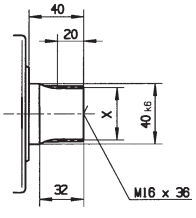

Z: Detail

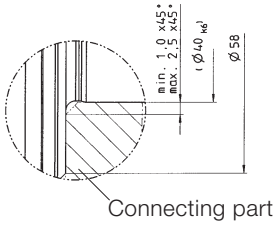

Non-tolerated dimensions ± 1 mm

1) Check motor shaft fit.
2) Min./Max. permissible motor shaft length. Longer motor shafts are adaptable, please contact us.
3) The dimensions depend on the motor.
4) Smaller motor shaft diameter is compensated by a bushing with a minimum thickness of 1 mm.

⚠ Motor mounting according to operating manual

				2-stage								
Ratio [a]			***i***	**16**	**20**	**25**	**28**	**35**	**40**	**50**	**70**	**100**
Max. acceleration torque (max. 1000 cycles per hour)			T_{2B} Nm	480	480	480	480	480	480	480	480	380
			T_{2B} in.lb	4248	4248	4248	4248	4248	4248	4248	4248	3363
cymex®-optimal nominal torque (please contact us regarding the design)			T_{2Ncym} Nm	290	290	290	–	–	–	–	–	–
			T_{2Ncym} in.lb	2567	2567	2567						
Nominal output torque (with n_{1N})			T_{2N} Nm	260	280	280	290	290	290	290	260	180
			T_{2N} in.lb	2301	2478	2478	2567	2567	2567	2567	2301	1593
Emergency stop torque (permitted 1000 times during the service life of the gearhead)			T_{2Not} Nm	1250	1250	1250	1250	1250	1250	1250	1250	1000
			T_{2Not} in.lb	11063	11063	11063	11063	11063	11063	11063	11063	8850
Nominal input speed (with T_{2N} and 20°C ambient temperature) [b]			n_{1N} rpm	4500	4500	4500	4500	4500	4500	4500	4500	4500
Max. input speed			n_{1Max} rpm	6000	6000	6000	6000	6000	6000	6000	6000	6000
Mean no load running torque (with n_1 = 3000 rpm and 20°C gearhead temperature) [c]			T_{012} Nm	1.6	1.3	1.2	1.0	0.9	0.7	0.6	0.5	0.5
			T_{012} in.lb	14.2	11.5	10.6	8.9	8.0	6.2	5.3	4.4	4.4
Max. torsional backlash			j_t arcmin	Standard ≤ 6 / Reduced ≤ 4								
Torsional rigidity			C_{t21} Nm/ arcmin	53								
			C_{t21} in.lb/ arcmin	469								
Max. axial force [d]			F_{2AMax} N	9870								
			F_{2AMax} lb_f	2221								
Max. radial force [d]			F_{2RMax} N	9450								
			F_{2RMax} lb_f	2126								
Max. tilting moment			M_{2KMax} Nm	952								
			M_{2KMax} in.lb	8425								
Efficiency at full load			η %	96.5								
Service life (For calculation, see the Chapter "Information")			L_h h	> 30000								
Weight incl. standard adapter plate			m kg	17								
			m lb_m	38								
Operating noise (with n_1 = 3000 rpm no load)			L_{PA} dB(A)	≤ 65								
Max. permitted housing temperature			°C	+90								
			F	194								
Ambient temperature			°C	0 to +40								
			F	32 to 104								
Lubrication				Lubricated for life								
Paint				Blue RAL 5002								
Direction of rotation				Motor and gearhead same direction								
Protection class				IP 65								
Moment of inertia (relates to the drive)	G	24	J_1 kgcm²	3.19	2.71	2.67	2.34	2.32	2.10	2.08	2.08	2.07
			J_1 10^{-3} in.lb.s²	2.82	2.40	2.36	2.07	2.05	1.85	1.85	1.84	1.83
Clamping hub diameter [mm]	K	38	J_1 kgcm²	10.3	9.77	9.73	9.41	9.39	9.16	9.15	9.14	9.14
			J_1 10^{-3} in.lb.s²	9.07	8.65	8.61	8.33	8.31	8.11	8.10	8.09	8.09

[a] Other ratios available on request
[b] For higher ambient temperatures, please reduce input speed
[c] Valid for clamping hub diameter of 24 mm
[d] Refers to center of the output shaft or flange

Motor shaft diameter [mm]

	View A	View B
up to 24 [4] (G) clamping hub diameter	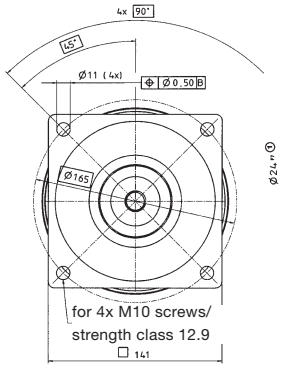	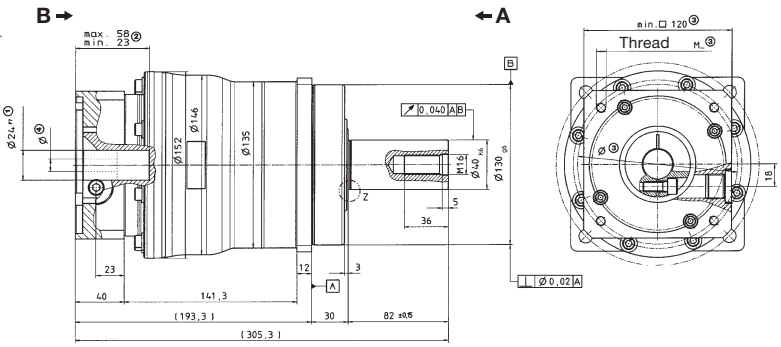
up to 38 [4] (K) clamping hub diameter	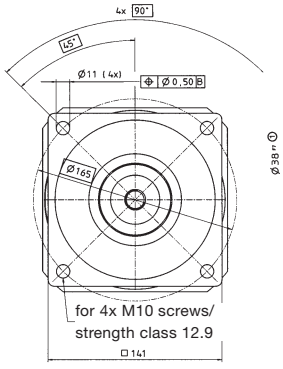	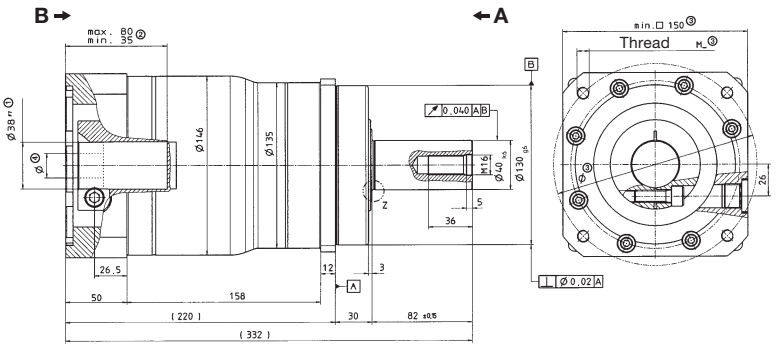

Alternatives: Output shaft variants

Keywayed output shaft in mm

E = key as per DIN 6885, sheet 1, form A

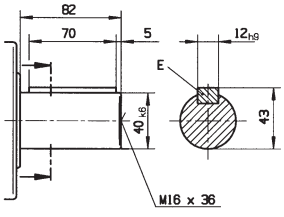

Involute gearing DIN 5480 in mm

X = W 40 x 2 x 30 x 18 x 6m, DIN 5480

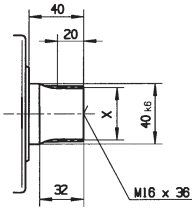

Z: Detail

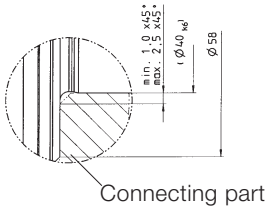

Non-tolerated dimensions ± 1 mm

1) Check motor shaft fit.
2) Min./Max. permissible motor shaft length. Longer motor shafts are adaptable, please contact us.
3) The dimensions depend on the motor.
4) Smaller motor shaft diameter is compensated by a bushing with a minimum thickness of 1 mm.

⚠ Motor mounting according to operating manual

SP+ 180 MC 1-stage

				1-stage				
Ratio [a]			***i***	**3**	**4**	**5**	**7**	**10**
Max. acceleration torque (max. 1000 cycles per hour)			T_{2B}	Nm	700	880	880	880	700
				in.lb	6195	7788	7788	7788	6195
cymex®-optimal nominal torque (please contact us regarding the design)			T_{2Ncym}	Nm	350	600	600	600	540
				in.lb	3098	5310	5310	5310	4779
Nominal output torque (with n_{1N})			T_{2N}	Nm	290	450	440	450	400
				in.lb	2567	3983	3894	3983	3540
Emergency stop torque (permitted 1000 times during the service life of the gearhead)			T_{2Not}	Nm	2200	2750	2750	2750	2200
				in.lb	19470	24338	24338	24338	19470
Nominal input speed (with T_{2N} and 20°C ambient temperature) [b]			n_{1N}	rpm	3000	3500	4500	4500	4500
Max. input speed			n_{1Max}	rpm	4500	6000	6000	6000	6000
Mean no load running torque (with n_1 = 3000 rpm and 20°C gearhead temperature) [c]			T_{012}	Nm	10.2	7.7	6.2	4.5	3.2
				in.lb	90.3	68.1	54.9	39.8	28.3
Max. torsional backlash			j_t	arcmin	Standard ≤ 4 / Reduced ≤ 2				
Torsional rigidity			C_{t21}	Nm/ arcmin	175				
				in.lb/ arcmin	1549				
Max. axial force [d]			F_{2AMax}	N	14150				
				lb_f	3184				
Max. radial force [d]			F_{2RMax}	N	14700				
				lb_f	3308				
Max. tilting moment			M_{2KMax}	Nm	1600				
				in.lb	14160				
Efficiency at full load			η	%	98.5				
Service life (For calculation, see the Chapter "Information")			L_h	h	> 30000				
Weight incl. standard adapter plate			m	kg	34				
				lb_m	75				
Operating noise (with n_1 = 3000 rpm no load i = 10)			L_{PA}	dB(A)	≤ 66				
Max. permitted housing temperature				°C	+90				
				F	194				
Ambient temperature				°C	0 to +40				
				F	32 to 104				
Lubrication					Lubricated for life				
Paint					Blue RAL 5002				
Direction of rotation					Motor and gearhead same direction				
Protection class					IP 65				
Moment of inertia (relates to the drive)	M	48	J_1	kgcm²	58.5	41.6	35.6	30.0	26.9
Clamping hub diameter [mm]				10^{-3} in.lb.s²	51.8	36.8	31.5	26.6	23.8

[a] Other ratios available on request
[b] For higher ambient temperatures, please reduce input speed
[c] Valid for clamping hub diameter of 48 mm
[d] Refers to center of the output shaft or flange

View A | View B

Motor shaft diameter [mm]

up to 48 [4] (M) clamping hub diameter

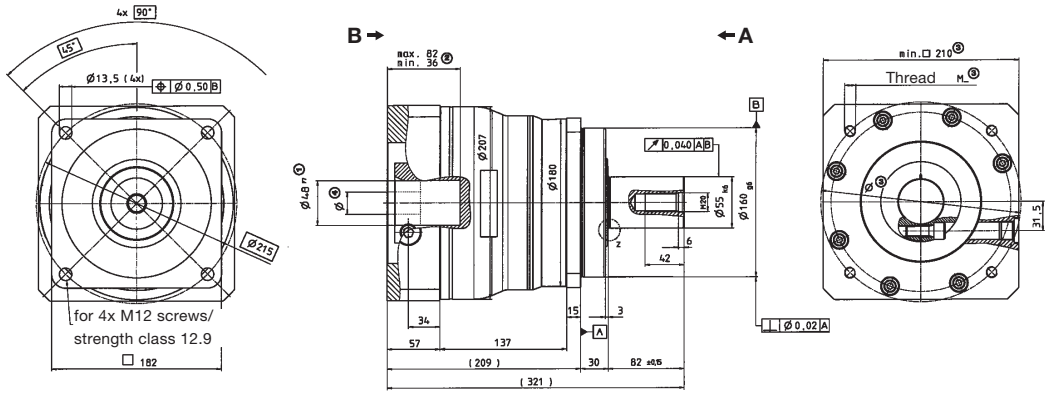

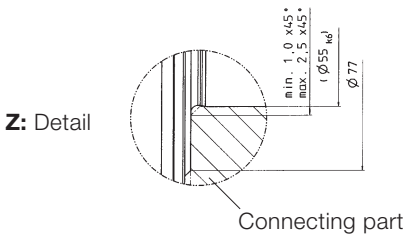

Alternatives: Output shaft variants

Keywayed output shaft in mm
E = key as per DIN 6885, sheet 1, form A

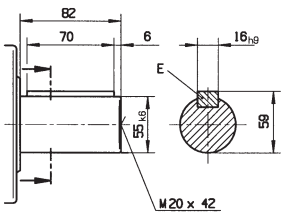

Involute gearing DIN 5480 in mm
X = W 55 x 2 x 30 x 26 x 6m, DIN 5480

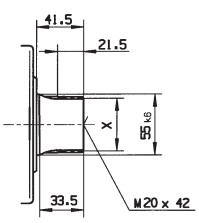

Non-tolerated dimensions ± 1 mm

1) Check motor shaft fit.
2) Min./Max. permissible motor shaft length. Longer motor shafts are adaptable, please contact us.
3) The dimensions depend on the motor.
4) Smaller motor shaft diameter is compensated by a bushing with a minimum thickness of 1 mm.

⚠ Motor mounting according to operating manual

				2-stage								
Ratio [a]			*i*	**16**	**20**	**25**	**28**	**35**	**40**	**50**	**70**	**100**
Max. acceleration torque (max. 1000 cycles per hour)			T_{2B}	Nm	880	880	880	880	880	880	880	880	700
				in.lb	7788	7788	7788	7788	7788	7788	7788	7788	6195
cymex®-optimal nominal torque (please contact us regarding the design)			T_{2Ncym}	Nm	–	–	–	–	–	–	–	–	–
				in.lb									
Nominal output torque (with n_{1N})			T_{2N}	Nm	600	600	600	600	600	600	600	600	600
				in.lb	5310	5310	5310	5310	5310	5310	5310	5310	5310
Emergency stop torque (permitted 1000 times during the service life of the gearhead)			T_{2Not}	Nm	2750	2750	2750	2750	2750	2750	2750	2750	2200
				in.lb	24338	24338	24338	24338	24338	24338	24338	24338	19470
Nominal input speed (with T_{2N} and 20°C ambient temperature) [b]			n_{1N}	rpm	4500	4500	4500	4500	4500	4500	4500	4500	4500
Max. input speed			n_{1Max}	rpm	6000	6000	6000	6000	6000	6000	6000	6000	6000
Mean no load running torque (with n_1 = 3000 rpm and 20°C gearhead temperature) [c]			T_{012}	Nm	3.2	2.6	2.3	1.9	1.7	1.4	1.2	1.0	0.9
				in.lb	28.3	23.0	20.4	16.8	15.0	12.4	10.6	8.9	8.0
Max. torsional backlash			j_t	arcmin	Standard ≤ 6 / Reduced ≤ 4								
Torsional rigidity			C_{t21}	Nm/ arcmin	175								
				in.lb/ arcmin	149								
Max. axial force [d]			F_{2AMax}	N	14150								
				lb_f	3184								
Max. radial force [d]			F_{2RMax}	N	14700								
				lb_f	3308								
Max. tilting moment			M_{2KMax}	Nm	1600								
				in.lb	14160								
Efficiency at full load			η	%	96.5								
Service life (For calculation, see the Chapter "Information")			L_h	h	> 30000								
Weight incl. standard adapter plate			*m*	kg	36								
				lb_m	80								
Operating noise (with n_1 = 3000 rpm no load)			L_{PA}	dB(A)	≤ 66								
Max. permitted housing temperature				°C	+90								
				F	194								
Ambient temperature				°C	0 to +40								
				F	32 to 104								
Lubrication					Lubricated for life								
Paint					Blue RAL 5002								
Direction of rotation					Motor and gearhead same direction								
Protection class					IP 65								
Moment of inertia (relates to the drive)	K	38	J_1	kgcm²	13.5	12.0	11.7	10.6	10.4	9.74	9.68	9.63	9.60
Clamping hub diameter [mm]				10^{-3} in.lb.s²	12.0	10.6	10.4	9.34	9.23	8.62	8.57	8.52	8.49

[a] Other ratios available on request
[b] For higher ambient temperatures, please reduce input speed
[c] Valid for clamping hub diameter of 38 mm
[d] Refers to center of the output shaft or flange

View A | View B

Motor shaft diameter [mm]

up to 38 [4] (K) clamping hub diameter

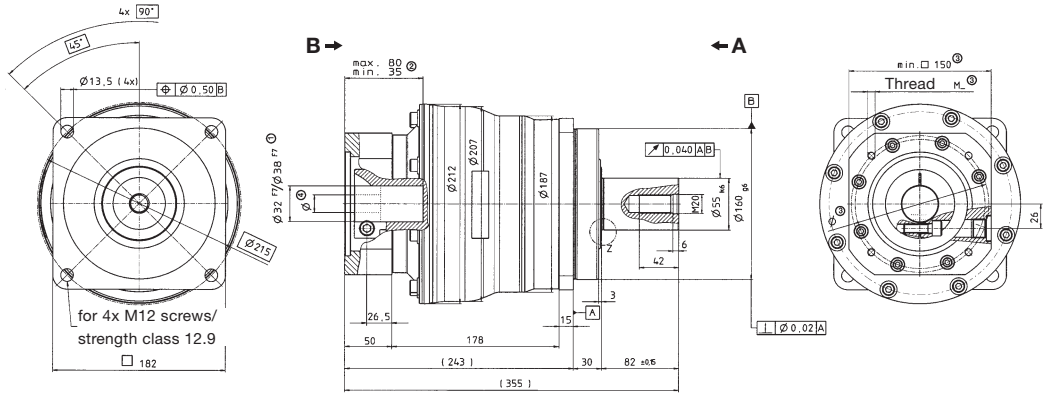

Alternatives: Output shaft variants

Keywayed output shaft in mm
E = key as per DIN 6885, sheet 1, form A

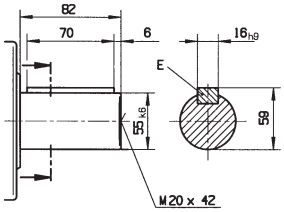

Involute gearing DIN 5480 in mm
X = W 55 x 2 x 30 x 26 x 6m, DIN 5480

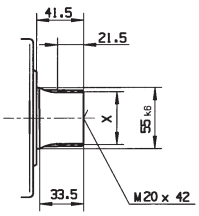

Z: Detail

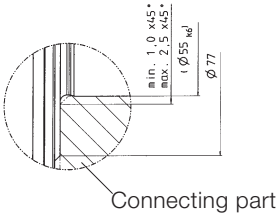

Non-tolerated dimensions ± 1 mm

1) Check motor shaft fit.
2) Min./Max. permissible motor shaft length. Longer motor shafts are adaptable, please contact us.
3) The dimensions depend on the motor.
4) Smaller motor shaft diameter is compensated by a bushing with a minimum thickness of 1 mm.

⚠ Motor mounting according to operating manual

SP+ 210 MC 1/2-stage

				1-stage					2-stage								
Ratio [a]			***i***	**3**	**4**	**5**	**7**	**10**	**16**	**20**	**25**	**28**	**35**	**40**	**50**	**70**	**100**
Max. acceleration torque (max. 1000 cycles per hour)			T_{2B} Nm	530	820	860	900	1000	820	860	860	900	860	820	860	900	1000
			in.lb	4691	7257	7611	7965	8850	7257	7611	7611	7965	7611	7257	7611	7965	8850
cymex®-optimal nominal torque (please contact us regarding the design)			T_{2Ncym} Nm	- Please contact us -													
			in.lb														
Nominal output torque (with n_{1N})			T_{2N} Nm	340	510	550	560	630	510	550	550	560	550	510	550	560	630
			in.lb	3009	4514	4868	4956	5576	4514	4868	4868	4956	4868	4514	4868	4956	5576
Emergency stop torque (permitted 1000 times during the service life of the gearhead)			T_{2Not} Nm	5000	5200	5200	5200	5000	5200	5200	5200	5200	5200	5200	5200	5200	5000
			in.lb	44250	46020	46020	46020	44250	46020	46020	46020	46020	46020	46020	46020	46020	44250
Nominal input speed (with T_{2N} and 20°C ambient temperature) [b]			n_{1N} rpm	2250	2500	3500	3500	3500	3500	4500	4500	4500	4500	4500	4500	4500	4500
Max. input speed			n_{1Max} rpm	3400	6000	6000	6000	6000	6000	6000	6000	6000	6000	6000	6000	6000	6000
Mean no load running torque (with n_1 = 2000 rpm and 20°C gearhead temperature)			T_{012} Nm	13.0	9.0	6.5	4.0	2.5	3.0	2.5	2.0	1.5	1.5	1.0	1.0	1.0	1.0
			in.lb	115.1	79.7	57.5	35.4	22.1	26.6	22.1	17.7	13.3	13.3	8.85	8.85	8.85	8.85
Max. torsional backlash			j_t arcmin	Standard ≤ 4 / Reduced ≤ 2					Standard ≤ 5 / Reduced ≤ 4								
Torsional rigidity			C_{t21} Nm/ arcmin	400					400								
			in.lb/ arcmin	3540					3540								
Max. axial force [c]			F_{2AMax} N	30000					30000								
			lb_f	6750					6750								
Max. radial force [c]			F_{2RMax} N	21000					21000								
			lb_f	4725					4725								
Max. tilting moment			M_{2KMax} Nm	3100					3100								
			in.lb	27435					27435								
Efficiency at full load			η %	98.5					96.5								
Service life (For calculation, see the Chapter "Information")			L_h h	> 30000					> 30000								
Weight incl. standard adapter plate			m kg	56					53								
			lb_m	124					117								
Operating noise (with n_1 = 3000 rpm no load)			L_{PA} dB(A)	≤ 70													
Max. permitted housing temperature			°C	+90													
			F	194													
Ambient temperature			°C	0 to +40													
			F	32 to 194													
Lubrication				Lubricated for life													
Paint				Blue RAL 5002													
Direction of rotation				Motor and gearhead same direction													
Protection class				IP 65													
Moment of inertia (relates to the drive)	M	48	J_1 kgcm²	-	-	-	-	-	34.5	31.5	30.8	30.0	29.7	28.5	28.3	28.1	28.0
			10^{-3} in.lb.s²						30.5	27.9	27.3	26.6	26.3	25.2	25.0	24.9	24.8
Clamping hub diameter (mm)	N	55	J_1 kgcm²	139.0	94.3	76.9	61.5	53.1	-	-	-	-	-	-	-	-	-
			10^{-3} in.lb.s²	123.0	83.5	68.1	54.4	47.0									

[a] Other ratios available on request
[b] For higher ambient temperatures, please reduce input speed
[c] Refers to center of the output shaft or flange

View A | View B

Motor shaft diameter [mm]

up to 55 [4] (N) clamping hub diameter

1-stage:

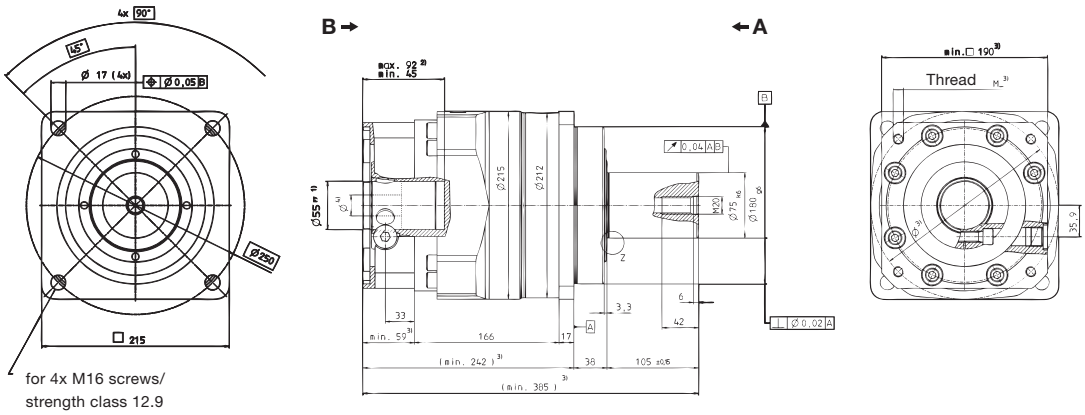

up to 48 [4] (M) clamping hub diameter

2-stage:

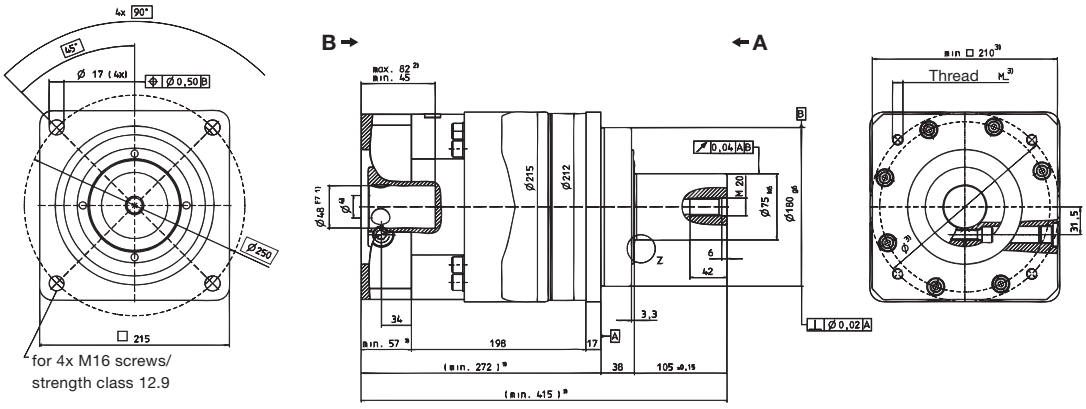

Z: Detail

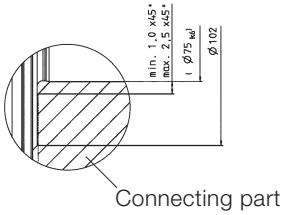

Alternatives: Output shaft variants

Keywayed output shaft in mm
E = key as per DIN 6885, sheet 1, form A

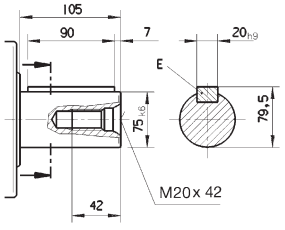

Involute gearing DIN 5480 in mm
X = W 70 x 2 x 30 x 34 x 6m, DIN 5480

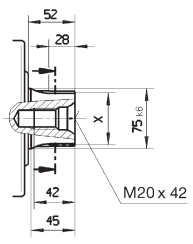

Non-tolerated dimensions ± 1.5 mm

1) Check motor shaft fit.
2) Min./Max. permissible motor shaft length. Longer motor shafts are adaptable, please contact us.
3) The dimensions depend on the motor.
4) Smaller motor shaft diameter is compensated by a bushing with a minimum thickness of 1 mm.

⚠ Motor mounting according to operating manual

SP+ 240 MC 1/2-stage

				1-stage					2-stage								
Ratio [a]			***i***	**3**	**4**	**5**	**7**	**10**	**16**	**20**	**25**	**28**	**35**	**40**	**50**	**70**	**100**
Max. acceleration torque (max. 1000 cycles per hour)			T_{2B} Nm	870	1300	1370	1430	1500	1300	1370	1370	1430	1370	1300	1370	1430	1500
			T_{2B} in.lb	7700	11505	12125	12656	13275	11505	12125	12125	12656	12125	11505	12125	12656	13275
cymex®-optimal nominal torque (please contact us regarding the design)			T_{2Ncym} Nm	- Please contact us -													
			T_{2Ncym} in.lb														
Nominal output torque (with n_{1N})			T_{2N} Nm	560	860	900	940	1000	860	900	900	940	900	860	900	940	1000
			T_{2N} in.lb	4956	7611	7965	8319	8850	7611	7965	7965	8319	7965	7611	7965	8319	8850
Emergency stop torque (permitted 1000 times during the service life of the gearhead)			T_{2Not} Nm	6800	8500	8500	8500	6800	8500	8500	8500	8500	8500	8500	8500	8500	6800
			T_{2Not} in.lb	60180	75225	75225	75225	60180	75225	75225	75225	75225	75225	75225	75225	75225	60180
Nominal input speed (with T_{2N} and 20°C ambient temperature) [b]			n_{1N} rpm	1750	2250	3000	3000	3000	3500	4500	4500	4500	4500	4500	4500	4500	4500
Max. input speed			n_{1Max} rpm	3400	4000	5000	5000	5000	6000	6000	6000	6000	6000	6000	6000	6000	6000
Mean no load running torque (with n_1 = 2000 rpm and 20°C gearhead temperature)			T_{012} Nm	–	–	–	–	–	–	–	–	–	–	–	–	–	–
			T_{012} in.lb														
Max. torsional backlash			j_t arcmin	Standard ≤ 4 / Reduced ≤ 2					Standard ≤ 5 / Reduced ≤ 4								
Torsional rigidity			C_{t21} Nm/ arcmin	550					550								
			C_{t21} in.lb/ arcmin	4868					4868								
Max. axial force [c]			F_{2AMax} N	33000					33000								
			F_{2AMax} lb_f	7425					7425								
Max. radial force [c]			F_{2RMax} N	30000					30000								
			F_{2RMax} lb_f	6750					6750								
Max. tilting moment			M_{2KMax} Nm	5000					5000								
			M_{2KMax} in.lb	44250					44250								
Efficiency at full load			η %	98.5					96.5								
Service life (For calculation, see the Chapter "Information")			L_h h	> 30000					> 30000								
Weight incl. standard adapter plate			m kg	77					76								
			m lb_m	170					168								
Operating noise (with n_1 = 3000 rpm no load)			L_{PA} dB(A)	≤ 70													
Max. permitted housing temperature			°C	+90													
			F	194													
Ambient temperature			°C	0 to +40													
			F	32 to 104													
Lubrication				Lubricated for life													
Paint				Blue RAL 5002													
Direction of rotation				Motor and gearhead same direction													
Protection class				IP 65													
Moment of inertia (relates to the drive)	M	48	J_1 kgcm²	-	-	-	-	-	39.2	34.6	33.2	30.5	29.7	28.2	27.9	27.6	27.5
			J_1 10^{-3} in.lb.s²						34.7	30.6	29.4	27.0	26.3	25.0	24.7	24.4	24.3
Clamping hub diameter [mm]	O	60	J_1 kgcm²	260.2	198.2	163.0	84.4	70.8	-	-	-	-	-	-	-	-	-
			J_1 10^{-3} in.lb.s²	230.3	175.4	144.3	74.7	62.7									

[a] Other ratios available on request
[b] For higher ambient temperatures, please reduce input speed
[c] Refers to center of the output shaft or flange

View A | View B

Motor shaft diameter [mm]

up to 60 [4] (O) clamping hub diameter

1-stage:

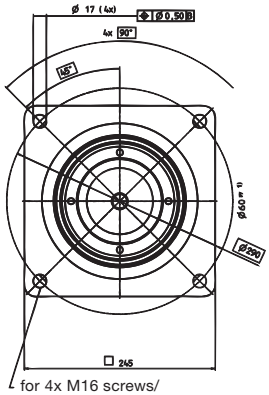

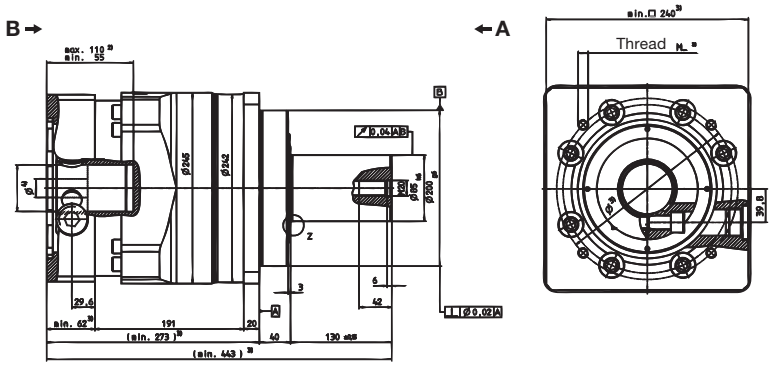

up to 48 [4] (M) clamping hub diameter

2-stage:

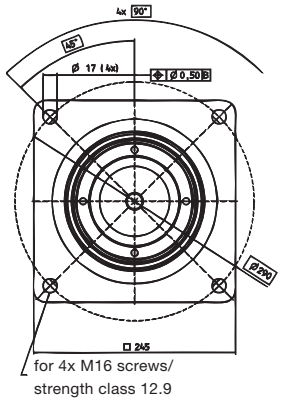

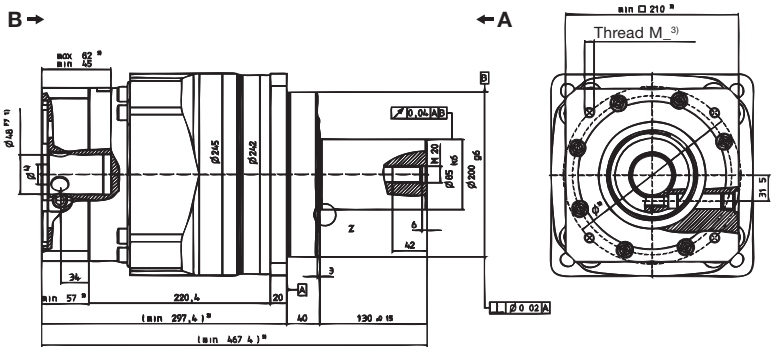

Z: Detail

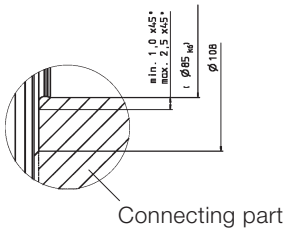

Alternatives: Output shaft variants

Keywayed output shaft in mm
E = key as per DIN 6885, sheet 1, form A

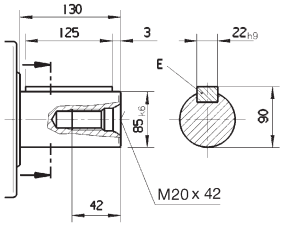

Involute gearing DIN 5480 in mm
X = W 80 x 2 x 30 x 38 x 6m, DIN 5480

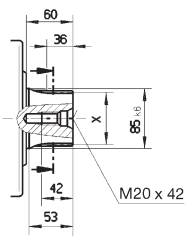

Non-tolerated dimensions ± 1.5 mm

1) Check motor shaft fit.
2) Min./Max. permissible motor shaft length. Longer motor shafts are adaptable, please contact us.
3) The dimensions depend on the motor.
4) Smaller motor shaft diameter is compensated by a bushing with a minimum thickness of 1 mm.

⚠ Motor mounting according to operating manual



LP⁺ – A reliable and durable player among planetary gearheads

LP+/LPB+

Details



LP+ 050 1/2-stage

			1-stage		2-stage		
Ratio	***i***		**5**	**10**	**25**	**50**	**100**
Max. acceleration torque (max. 1000 cycles per hour)	T_{2B}	Nm	12	11	12	12	11
		in.lb	106	97	106	106	97
Nominal output torque (with n_{1N})	T_{2N}	Nm	5.7	5.2	5.7	5.7	5.2
		in.lb	50	46	50	50	46
Emergency stop torque (permitted 1000 times during the service life of the gearhead)	T_{2Not}	Nm	26	26	26	26	26
		in.lb	230	230	230	230	230
Nominal input speed (with T_{2N} and 20°C ambient temperature) [a]	n_{1N}	rpm	4000	4000	4000	4000	4000
Max. input speed	n_{1Max}	rpm	8000	8000	8000	8000	8000
Mean no load running torque (with n_1 = 3000 rpm and 20°C gearhead temperature)	T_{012}	Nm	0.05	0.05	0.05	0.05	0.05
		in.lb	0.44	0.44	0.44	0.44	0.44
Max. torsional backlash	j_t	arcmin	Standard ≤ 12 / Reduced ≤ 10		Standard ≤ 15 / Reduced ≤ 13		
Torsional rigidity	C_{t21}	Nm/ arcmin	1.2	0.85	1.2	1.2	0.85
		in.lb/ arcmin	10.6	7.5	10.6	10.6	7.5
Max. axial force [b]	F_{2AMax}	N	700		700		
		lb_f	158		158		
Max. radial force [b]	F_{2RMax}	N	650		650		
		lb_f	146		146		
Efficiency at full load	η	%	97		95		
Service life (For calculation, see the Chapter "Information")	L_h	h	> 20000		> 20000		
Weight incl. standard adapter plate	m	kg	0.75		0.95		
		lb_m	1.7		2.1		
Operating noise (with n_1 = 3000 rpm no load)	L_{PA}	dB(A)	≤ 68				
Max. permitted housing temperature		°C	+90				
		F	194				
Ambient temperature		°C	0 to +40				
		F	32 to 104				
Lubrication			Lubricated for life				
Paint			Blue RAL 5002				
Direction of rotation			Motor and gearhead same direction				
Protection class			IP 64				
Moment of inertia (relates to the drive)	J_1	$kgcm^2$	0.050	0.046	0.049	0.046	0.046
		10^{-3} in.lb.s²	0.044	0.041	0.043	0.041	0.041

[a] For higher ambient temperatures, please reduce input speed

[b] Refers to center of the output shaft, if n_2 = 100 rpm

LP⁺ 1-stage:

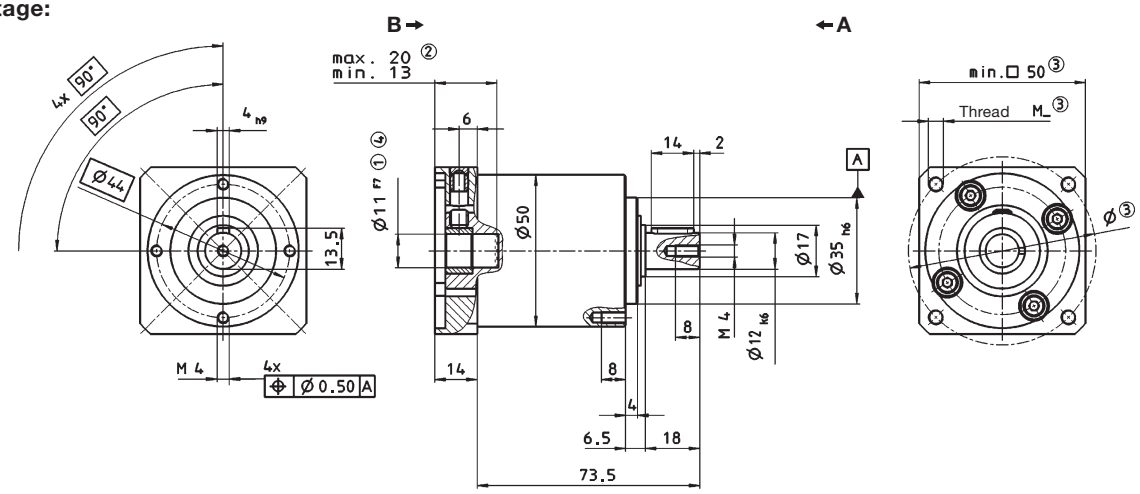

LP⁺ 2-stage:

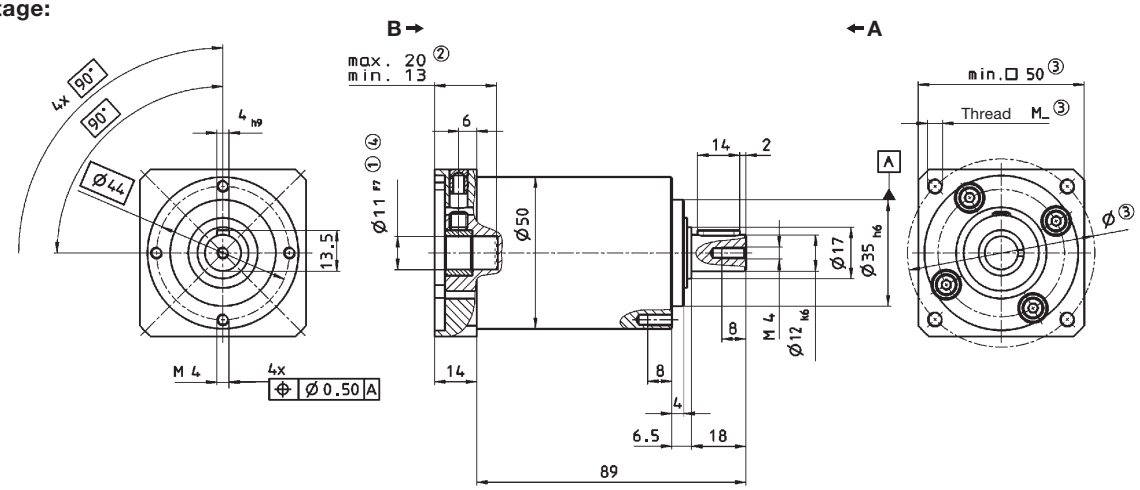

Non-tolerated dimensions ±1 mm

1) Check motor shaft fit.
2) Min./Max. permissible motor shaft length. Longer motor shafts are adaptable, please contact us.
3) The dimensions depend on the motor.
4) Smaller motor shaft diameter is compensated by a bushing.

⚠ Motor mounting according to operating manual

LP+/LPB+ 070 1/2-stage

				1-stage					2-stage						
Ratio [a]	i			**3**	**4**	**5**	**7**	**10**	**15**	**16**	**25**	**30**	**50**	**70**	**100**
Max. acceleration torque (max. 1000 cycles per hour)	T_{2B}	Nm		32	35	35	35	32	32	35	35	32	35	35	32
		in.lb		283	310	310	310	283	283	310	310	283	310	310	283
Nominal output torque (with n_{1N})	T_{2N}	Nm		16.5	18	18	18	16.5	16.5	18	18	16.5	18	18	16.5
		in.lb		146	159	159	159	146	146	159	159	146	159	159	146
Emergency stop torque (permitted 1000 times during the service life of the gearhead)	T_{2Not}	Nm		65	75	75	75	75	75	75	75	75	75	75	75
		in.lb		575	664	664	664	664	664	664	664	664	664	664	664
Nominal input speed (with T_{2N} and 20°C ambient temperature) [b]	n_{1N}	rpm		3700	3700	3700	3700	3700	3700	3700	3700	3700	3700	3700	3700
Max. input speed	n_{1Max}	rpm		6000	6000	6000	6000	6000	6000	6000	6000	6000	6000	6000	6000
Mean no load running torque (with n_1 = 3000 rpm and 20°C gearhead temperature)	T_{012}	Nm		0.30	0.25	0.20	0.14	0.14	0.14	0.14	0.14	0.14	0.14	0.14	0.10
		in.lb		2.7	2.2	1.8	1.2	1.2	1.2	1.2	1.2	1.2	1.2	1.2	0.9
Max. torsional backlash	j_t	arcmin		Standard ≤ 12 / Reduced ≤ 8					Standard ≤ 15 / Reduced ≤ 10						
Torsional rigidity	C_{t21}	Nm/ arcmin	LP+	2.8	3.3	3.3	3.3	2.8	2.8	3.3	3.3	2.8	3.3	3.3	2.8
		in.lb/ arcmin	LP+	25	29	29	29	25	25	29	29	25	29	29	25
			LPB+	–	–	–	–	–	–	–	–	–	–	–	–
Max. axial force [c]	F_{2AMax}	N	LP+	1550					1550						
		lb_f	LP+	349					349						
Max. radial force	F_{2RMax}	N	LP+ [c]	1450					1450						
		lb_f	LP+ [c]	326					326						
		N	LPB+ [d]	3000					–						
		lb_f	LPB+ [d]	675											
Efficiency at full load	η	%		97					95						
Service life (For calculation, see the Chapter "Information")	L_h	h		> 20000					> 20000						
Weight incl. standard adapter plate	m	kg	LP+	2.0					2.4						
		lb_m	LP+	4.4					5.3						
		kg	LPB+	1.6					–						
		lb_m	LPB+	3.5											
Operating noise (with n_1 = 3000 rpm no load)	L_{PA}	dB(A)		≤ 70											
Max. permitted housing temperature		°C		+90											
		F		194											
Ambient temperature		°C		0 to +40											
		F		32 to 104											
Lubrication				Lubricated for life											
Paint				Blue RAL 5002											
Direction of rotation				Motor and gearhead same direction											
Protection class				IP 64											
Moment of inertia (relates to the drive)	J_1	$kgcm^2$	LP+	0.30	0.25	0.23	0.22	0.21	0.23	0.24	0.22	0.21	0.21	0.21	0.21
		10^{-3} in.lb.s²	LP+	0.27	0.22	0.20	0.19	0.19	0.20	0.21	0.19	0.19	0.19	0.19	0.19
		$kgcm^2$	LPB+	0.30	0.25	0.23	0.22	0.21	–	–	–	–	–	–	–
		10^{-3} in.lb.s²	LPB+	0.27	0.22	0.20	0.19	0.19							

[a] LPB available with ratio 3, 4, 5, 7, 10
[b] For higher ambient temperatures, please reduce input speed
[c] Refers to center of the output shaft, if n_2 = 100 rpm
[d] With mounted PLPB+ belt pulley and 100 rpm

LP⁺ 1-stage:

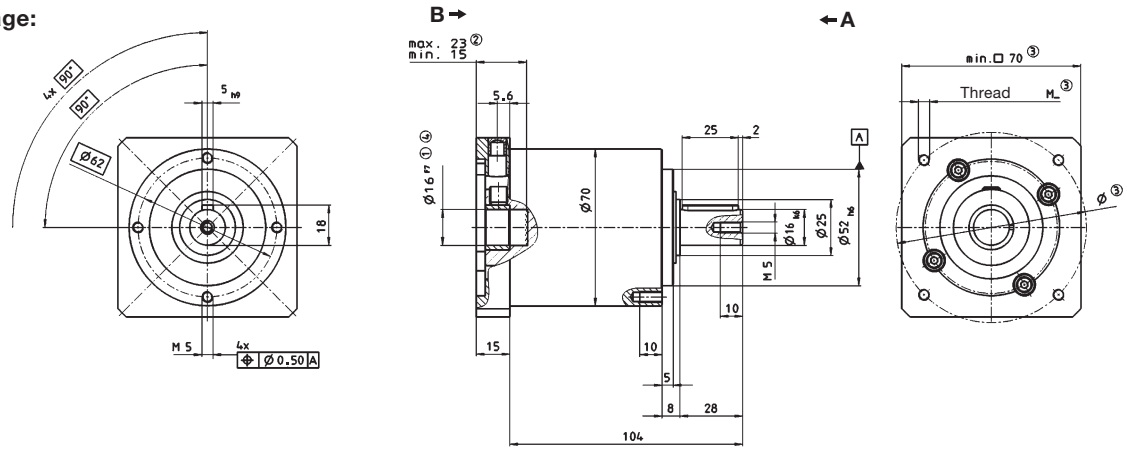

LPB⁺ 1-stage:

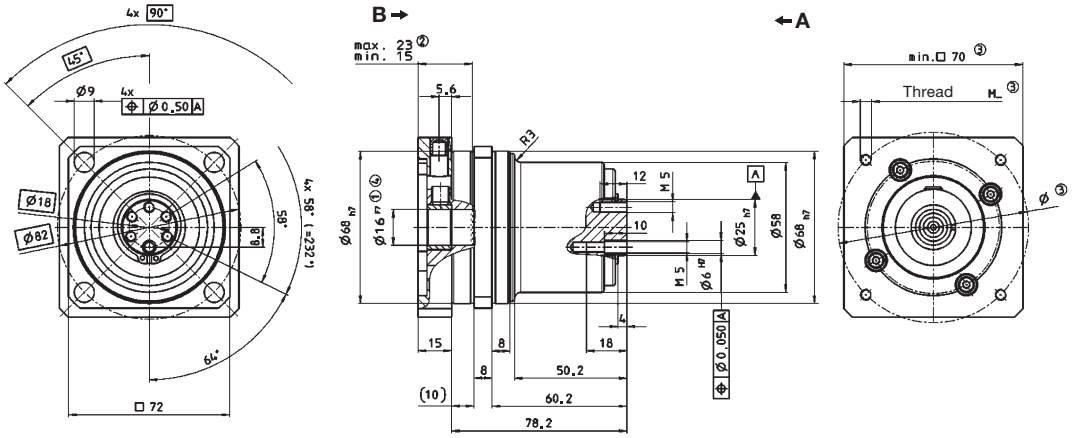

LP⁺ 2-stage:

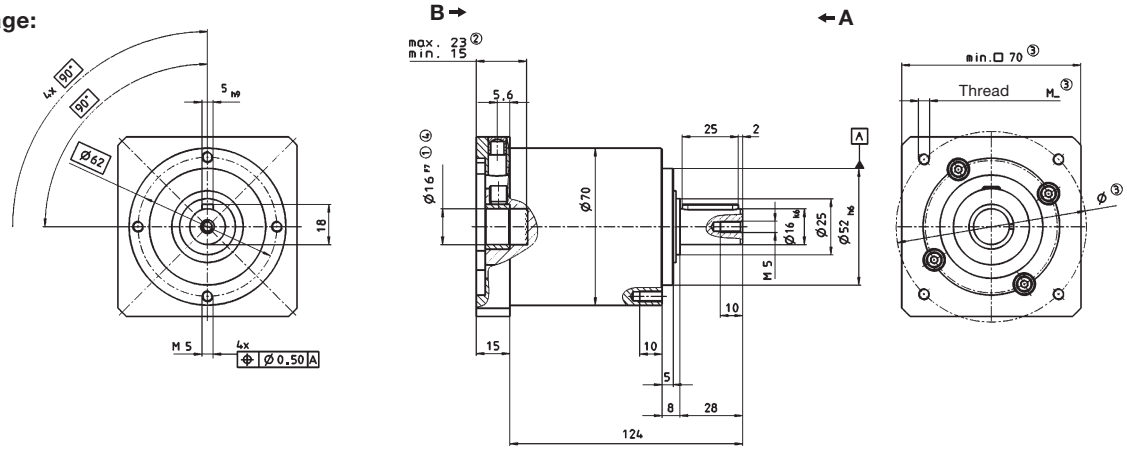

Supplement: Belt pulley PLPB⁺

View A

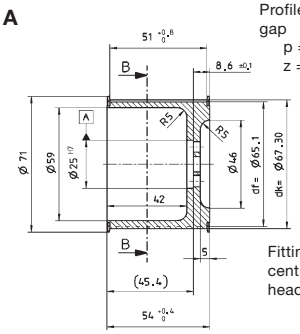

Profile AT05-0
gap
p = 5 mm
z = 43

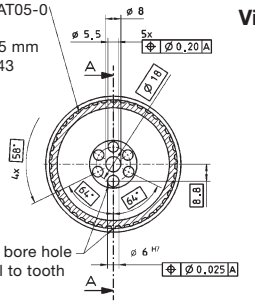

Fitting bore hole central to tooth head

View B

PCD effective diameter			$d_0 = (z \cdot p) / \pi$
Weight	m	kg	0.48
		lb_m	1.06
Moment of inertia	J_1	kgcm²	3.86
		10^{-3} in.lb.s²	3.41

Non-tolerated dimensions ±1 mm

1) Check motor shaft fit.
2) Min./Max. permissible motor shaft length. Longer motor shafts are adaptable, please contact us.
3) The dimensions depend on the motor.
4) Smaller motor shaft diameter is compensated by a bushing.

⚠ Motor mounting according to operating manual

LP+/LPB+ 090 1/2-stage

				1-stage					2-stage						
Ratio [a]	i			**3**	**4**	**5**	**7**	**10**	**15**	**16**	**25**	**30**	**50**	**70**	**100**
Max. acceleration torque (max. 1000 cycles per hour)	T_{2B}	Nm		80	90	90	90	80	80	90	90	80	90	90	80
		in.lb		708	797	797	797	708	708	797	797	708	797	797	708
Nominal output torque (with n_{1N})	T_{2N}	Nm		40	45	45	45	40	40	45	45	40	45	45	40
		in.lb		354	398	398	398	354	354	398	398	354	398	398	354
Emergency stop torque (permitted 1000 times during the service life of the gearhead)	T_{2Not}	Nm		185	190	190	190	190	190	190	190	190	190	190	190
		in.lb		1637	1682	1682	1682	1682	1682	1682	1682	1682	1682	1682	1682
Nominal input speed (with T_{2N} and 20°C ambient temperature) [b]	n_{1N}	rpm		3400	3400	3400	3400	3400	3400	3400	3400	3400	3400	3400	3400
Max. input speed	n_{1Max}	rpm		6000	6000	6000	6000	6000	6000	6000	6000	6000	6000	6000	6000
Mean no load running torque (with n_1 = 3000 rpm and 20°C gearhead temperature)	T_{012}	Nm		0.60	0.55	0.50	0.40	0.38	0.30	0.30	0.30	0.30	0.25	0.25	0.25
		in.lb		5.3	4.9	4.4	3.5	3.4	2.7	2.7	2.7	2.7	2.2	2.2	2.2
Max. torsional backlash	j_t	arcmin		Standard ≤ 12 / Reduced ≤ 8					Standard ≤ 15 / Reduced ≤ 10						
Torsional rigidity	C_{t21}	Nm/ arcmin	LP+	8.5	9.5	9.5	9.5	8.5	8.5	9.5	9.5	8.5	9.5	9.5	8.5
		in.lb/ arcmin	LP+	75	84	85	85	75	75	84	84	75	84	84	75
			LPB+	–	–	–	–	–	–	–	–	–	–	–	–
Max. axial force [c]	F_{2AMax}	N	LP+	1900					1900						
		lb_f	LP+	428					428						
Max. radial force	F_{2RMax}	N	LP+ [c]	2400					2400						
		lb_f	LP+ [c]	540					540						
		N	LPB+ [d]	4300					–						
		lb_f	LPB+ [d]	967.5											
Efficiency at full load	η	%		97					95						
Service life (For calculation, see the Chapter "Information")	L_h	h		> 20000					> 20000						
Weight incl. standard adapter plate	m	kg	LP+	4.0					5.0						
		lb_m	LP+	8.8					11.1						
		kg	LPB+	3.3					–						
		lb_m	LPB+	7.3											
Operating noise (with n_1 = 3000 rpm no load)	L_{PA}	dB(A)		≤ 72											
Max. permitted housing temperature		°C		+90											
		F		194											
Ambient temperature		°C		0 to +40											
		F		32 to 104											
Lubrication				Lubricated for life											
Paint				Blue RAL 5002											
Direction of rotation				Motor and gearhead same direction											
Protection class				IP 64											
Moment of inertia (relates to the drive)	J_1	$kgcm^2$	LP+	1.83	1.62	1.55	1.47	1.43	1.50	1.49	1.42	1.42	1.42	1.42	1.42
		10^{-3} in.lb.s²	LP+	1.62	1.43	1.37	1.30	1.27	1.33	1.32	1.26	1.26	1.26	1.26	1.26
		$kgcm^2$	LPB+	1.82	1.62	1.54	1.47	1.43	–	–	–	–	–	–	–
		10^{-3} in.lb.s²	LPB+	1.61	1.43	1.36	1.30	1.27							

[a] LPB available with ratio 3, 4, 5, 7, 10
[b] For higher ambient temperatures, please reduce input speed
[c] Refers to center of the output shaft, if n_2 = 100 rpm
[d] With mounted PLPB+ belt pulley and 100 rpm

LP⁺ 1-stage:

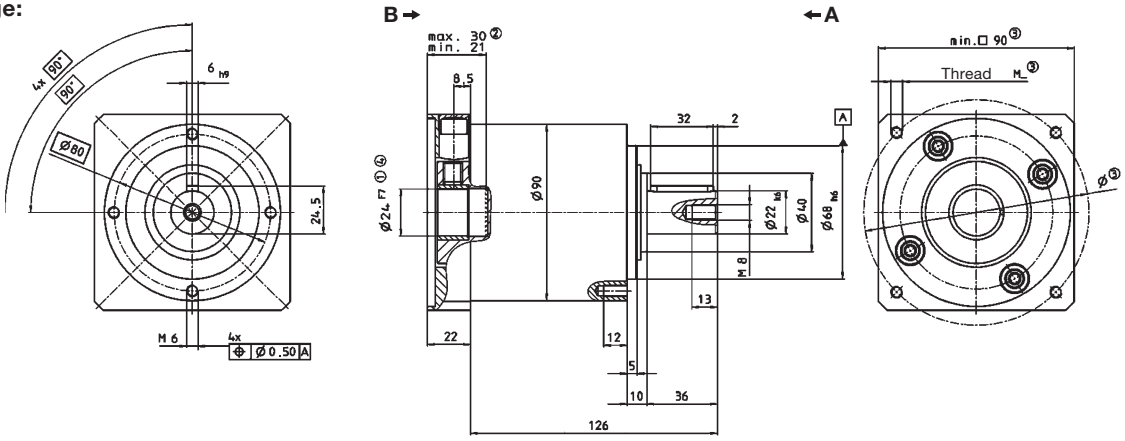

LPB⁺ 1-stage:

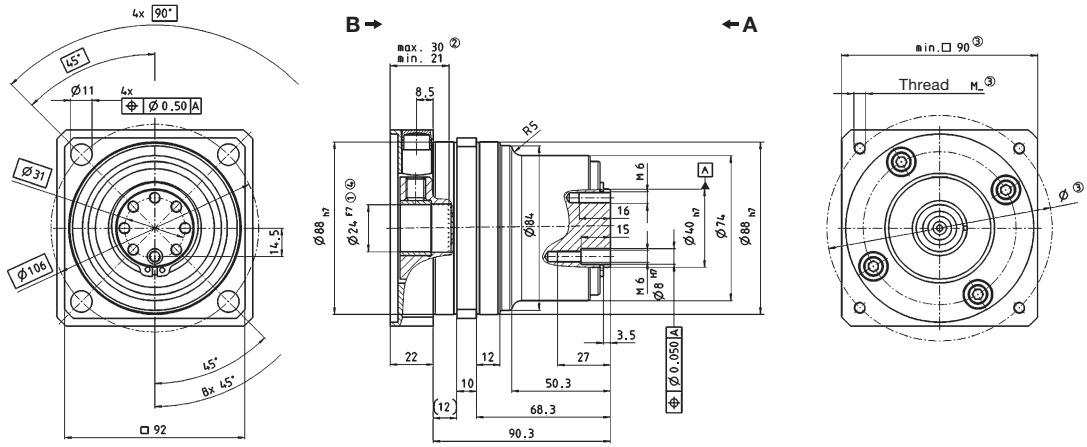

LP⁺ 2-stage:

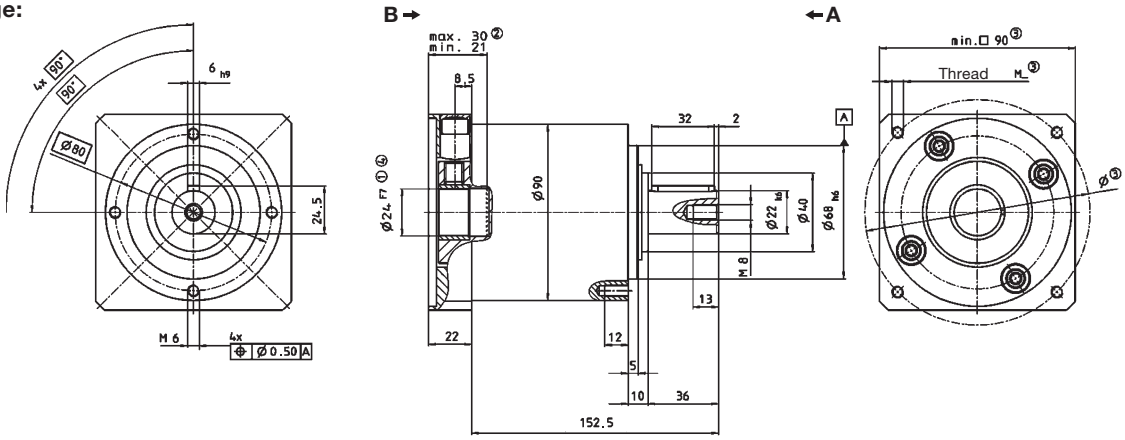

Supplement: Belt pulley PLPB⁺

View A

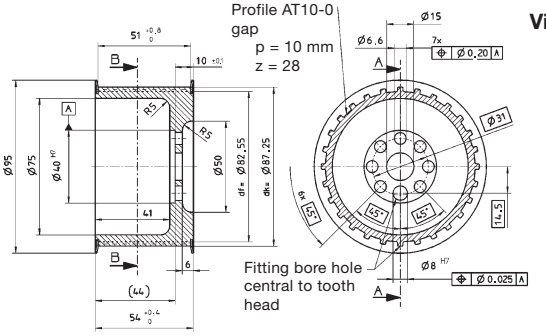

View B

PCD effective diameter			$d_0 = (z \cdot p) / \pi$
Weight	m	kg	0.82
		lb_m	1.81
Moment of inertia	J_1	$kgcm^2$	10.95
		10^{-3} in.lb.s²	9.69

Non-tolerated dimensions ±1 mm

1) Check motor shaft fit.
2) Min./Max. permissible motor shaft length. Longer motor shafts are adaptable, please contact us.
3) The dimensions depend on the motor.
4) Smaller motor shaft diameter is compensated by a bushing.

⚠ Motor mounting according to operating manual

LP+/LPB+ 120 1/2-stage

				1-stage					2-stage						
Ratio [a]	i			**3**	**4**	**5**	**7**	**10**	**15**	**16**	**25**	**30**	**50**	**70**	**100**
Max. acceleration torque (max. 1000 cycles per hour)	T_{2B}	Nm		200	200	220	220	200	200	220	220	200	220	220	200
		in.lb		1770	1770	1947	1947	1770	1770	1947	1947	1770	1947	1947	1770
Nominal output torque (with n_{1N})	T_{2N}	Nm		100	110	110	110	100	100	110	110	100	110	110	100
		in.lb		885	974	974	974	885	885	974	974	885	974	974	885
Emergency stop torque (permitted 1000 times during the service life of the gearhead)	T_{2Not}	Nm		400	480	480	480	480	480	480	480	480	480	480	480
		in.lb		3540	4248	4248	4248	4248	4248	4248	4248	4248	4248	4248	4248
Nominal input speed (with T_{2N} and 20°C ambient temperature) [b]	n_{1N}	rpm		2600	2600	2600	2600	2600	2600	2600	2600	2600	2600	2600	2600
Max. input speed	n_{1Max}	rpm		4800	4800	4800	4800	4800	4800	4800	4800	4800	4800	4800	4800
Mean no load running torque (with n_1 = 3000 rpm and 20°C gearhead temperature)	T_{012}	Nm		1.1	1.0	0.9	0.8	0.8	0.6	0.55	0.5	0.4	0.4	0.4	0.4
		in.lb		9.7	8.9	8.0	7.1	7.1	5.3	4.9	4.4	3.5	3.5	3.5	3.5
Max. torsional backlash	j_t	arcmin		Standard ≤ 12 / Reduced ≤ 8					Standard ≤ 15 / Reduced ≤ 10						
Torsional rigidity	C_{t21}	Nm/ arcmin	LP+	22	25	25	25	22	22	25	25	22	25	25	22
		in.lb/ arcmin	LP+	195	221	221	221	195	195	221	221	195	221	221	195
			LPB+	–	–	–	–	–	–	–	–	–	–	–	–
Max. axial force [c]	F_{2AMax}	N	LP	4000					4000						
		lb_f	LP	900					900						
Max. radial force	F_{2RMax}	N	LP+ [c]	4600					4600						
		lb_f	LP+ [c]	1035					1035						
		N	LPB+ [d]	9500					–						
		lb_f	LPB+ [d]	2138											
Efficiency at full load	η	%		97					95						
Service life (For calculation, see the Chapter "Information")	L_h	h		> 20000					> 20000						
Weight incl. standardadapter plate	m	kg	LP+	8.6					11.0						
		lb_m	LP+	19.0					24.3						
		kg	LPB+	7.3					–						
		lb_m	LPB+	16.1											
Operating noise (with n_1 = 3000 rpm no load)	L_{PA}	dB(A)		≤ 74											
Max. permitted housing temperature		°C		+90											
		F		194											
Ambient temperature		°C		0 to +40											
		F		32 to 104											
Lubrication				Lubricated for life											
Paint				Blue RAL 5002											
Direction of rotation				Motor and gearhead same direction											
Protection class				IP 64											
Moment of inertia (relates to the drive)	J_1	$kgcm^2$	LP+	6.90	5.94	5.58	5.24	5.06	5.35	5.53	5.30	5.00	4.99	4.99	4.99
		10^{-3} in.lb.s²	LP+	6.11	5.26	4.94	4.64	4.48	4.73	4.89	4.69	4.43	4.42	4.42	4.42
		$kgcm^2$	LPB+	6.84	5.91	5.56	5.24	5.06	–	–	–	–	–	–	–
		10^{-3} in.lb.s²	LPB+	6.05	5.23	4.92	4.64	4.48							

[a] LPB available with ratio 3, 4, 5, 7, 10
[b] For higher ambient temperatures, please reduce input speed
[c] Refers to center of the output shaft, if n_2 = 100 rpm
[d] With mounted PLPB+ belt pulley and 100 rpm

View A | View B

LP⁺ 1-stage:

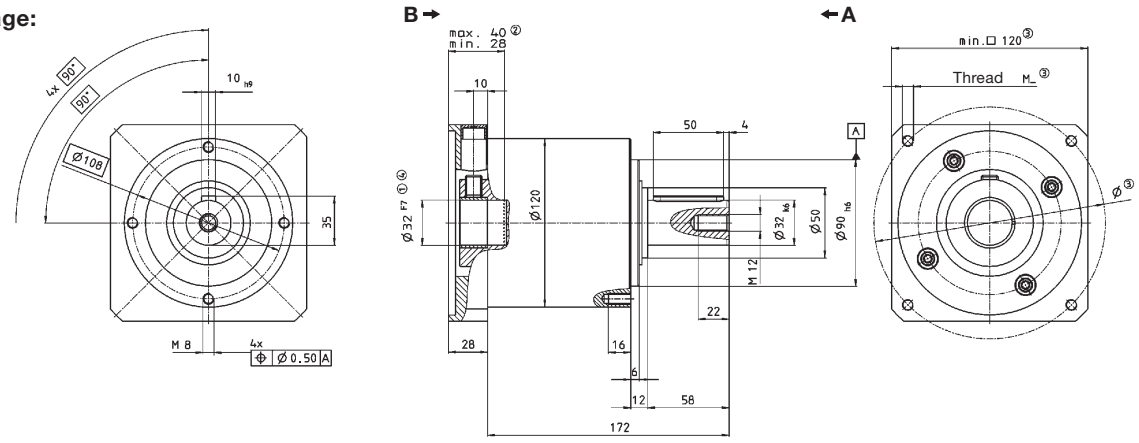

LPB⁺ 1-stage:

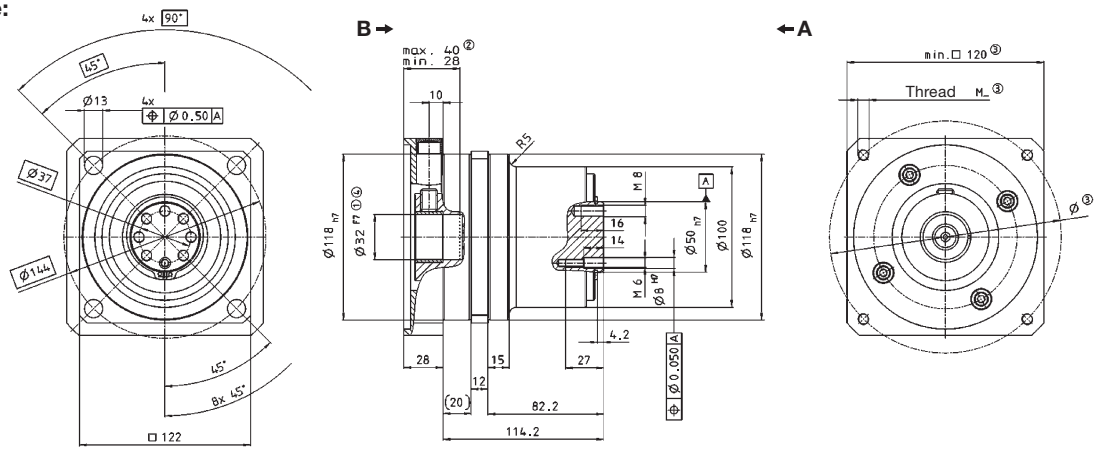

LP⁺ 2-stage:

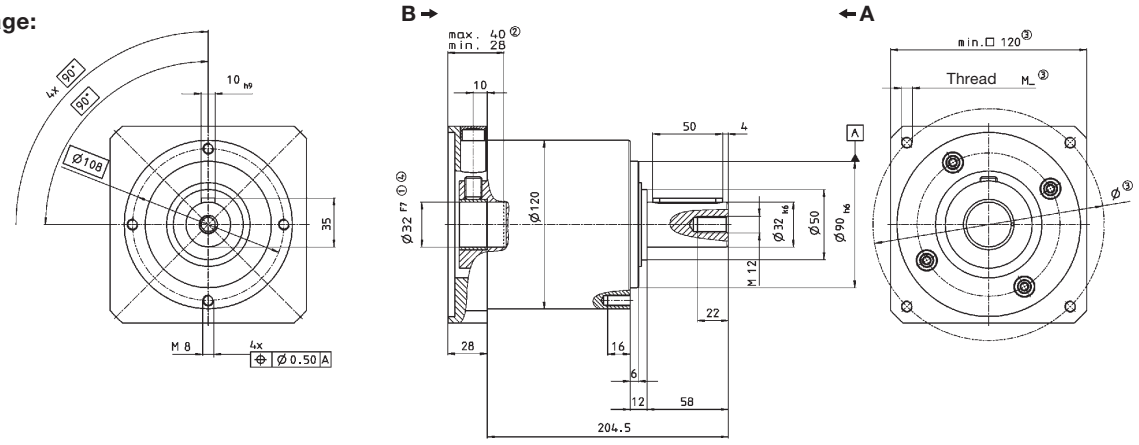

Supplement: Belt pulley PLPB⁺

View A

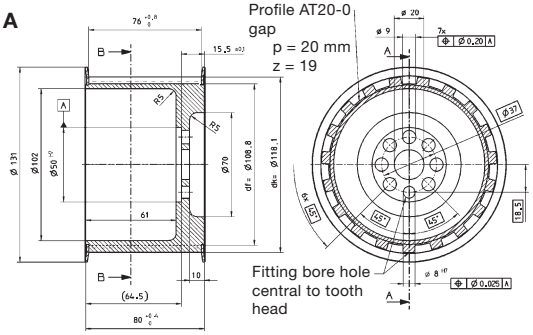

View B

PCD effective diameter			$d_0 = (z \cdot p) / \pi$
Weight	m	kg	2.61
		lb_m	5.77
Moment of inertia	J_1	$kgcm^2$	50.62
		10^{-3} in.lb.s²	44.80

Non-tolerated dimensions ±1 mm

1) Check motor shaft fit.
2) Min./Max. permissible motor shaft length. Longer motor shafts are adaptable, please contact us.
3) The dimensions depend on the motor.
4) Smaller motor shaft diameter is compensated by a bushing.

⚠ Motor mounting according to operating manual

			1-stage		2-stage		
Ratio	***i***		**5**	**10**	**25**	**50**	**100**
Max. acceleration torque (max. 1000 cycles per hour)	T_{2B}	Nm	450	350	450	450	350
		in.lb	3983	3098	3983	3983	3098
Nominal output torque (with n_{1N})	T_{2N}	Nm	320	190	320	320	190
		in.lb	2832	1682	2832	2832	1682
Emergency stop torque (permitted 1000 times during the service life of the gearhead)	T_{2Not}	Nm	1000	1000	1000	1000	1000
		in.lb	8850	8850	8850	8850	8850
Nominal input speed (with T_{2N} and 20°C ambient temperature) [a]	n_{1N}	rpm	2000	2000	2000	2000	2000
Max. input speed	n_{1Max}	rpm	3600	3600	3600	3600	3600
Mean no load running torque (with n_1 = 3000 rpm and 20°C gearhead temperature)	T_{012}	Nm	2.8	2.5	1.0	0.8	0.7
		in.lb	24.8	22.1	8.9	7.1	6.2
Max. torsional backlash	j_t	arcmin	Standard ≤ 12 / Reduced ≤ 8		Standard ≤ 15 / Reduced ≤ 10		
Torsional rigidity	C_{t21}	Nm/ arcmin	55	44	55	55	44
		in.lb/ arcmin	487	389	487	487	389
Max. axial force [b]	F_{2AMax}	N	6000		6000		
		lb_f	1350		1350		
Max. radial force [b]	F_{2RMax}	N	7500		7500		
		lb_f	1688		1688		
Efficiency at full load	η	%	97		95		
Service life (For calculation, see the Chapter "Information")	L_h	h	> 20000		> 20000		
Weight incl. standard adapter plate	m	kg	17.0		21.0		
		lb_m	37.6		46.4		
Operating noise (with n_1 = 3000 rpm no load)	L_{PA}	dB(A)	≤ 75				
Max. permitted housing temperature		°C	+90				
		F	194				
Ambient temperature		°C	0 to +40				
		F	32 to 104				
Lubrication			Lubricated for life				
Paint			Blue RAL 5002				
Direction of rotation			Motor and gearhead same direction				
Protection class			IP 64				
Moment of inertia (relates to the drive)	J_1	kgcm²	17.1	15.7	5.4	5.0	5.0
		10^{-3} in.lb.s²	15.1	13.9	4.8	4.4	4.4

[a] For higher ambient temperatures, please reduce input speed

[b] Refers to center of the output shaft, if n_2 = 100 rpm

View A View B

LP⁺ 1-stage:

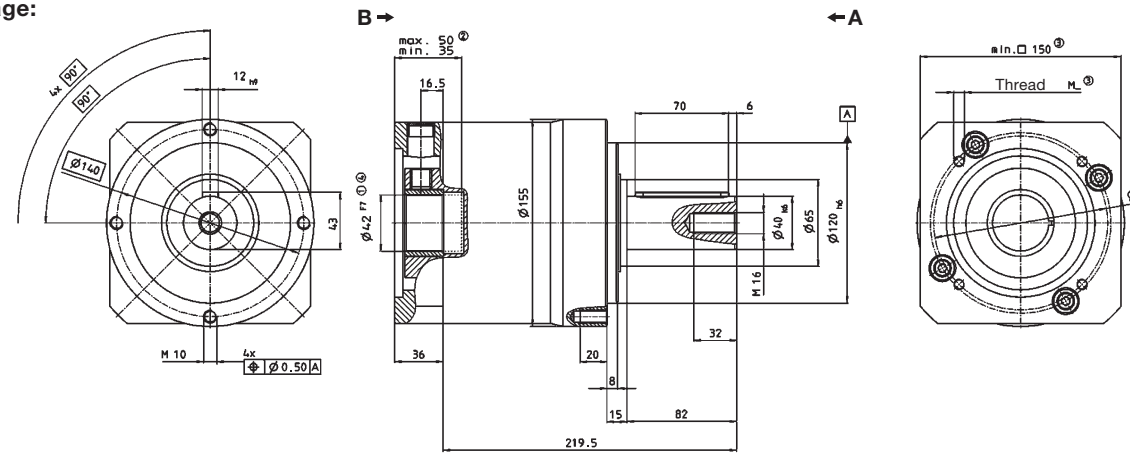

LP⁺ 2-stage:

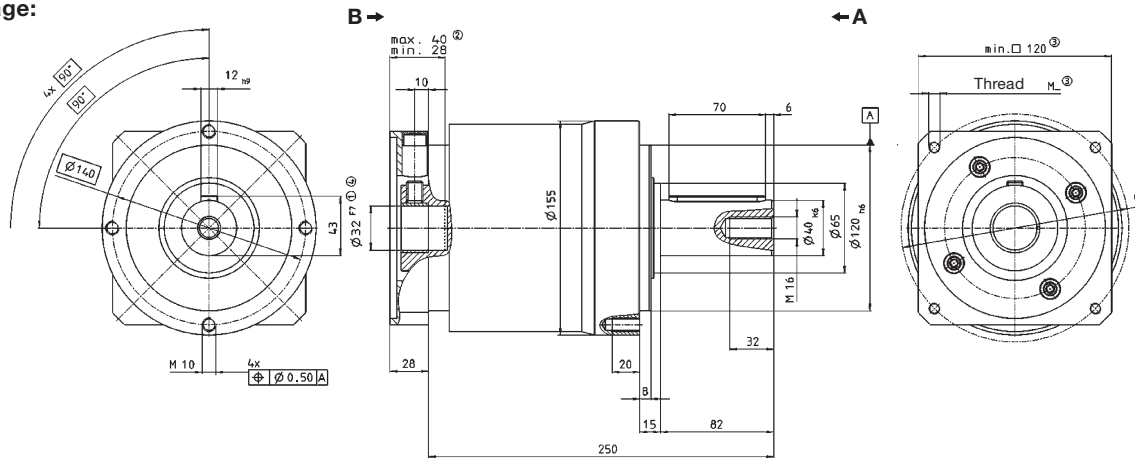

Non-tolerated dimensions ±1 mm

1) Check motor shaft fit.
2) Min./Max. permissible motor shaft length. Longer motor shafts are adaptable, please contact us.
3) The dimensions depend on the motor.
4) Smaller motor shaft diameter is compensated by a bushing.

⚠ Motor mounting according to operating manual



alphira® – The basic class among planetary gearheads

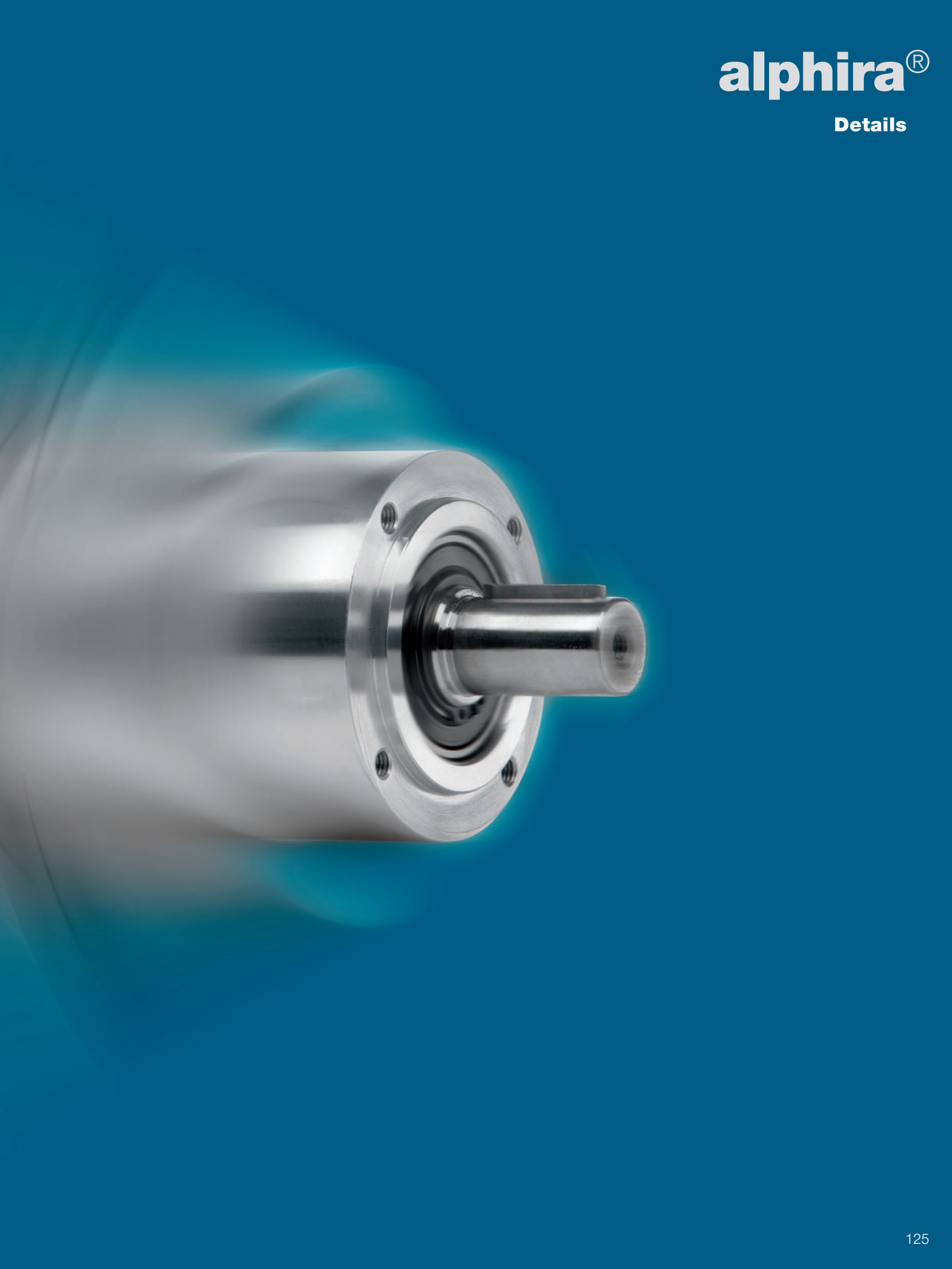

			1-stage		2-stage		
Ratio	***i***		**5**	**10**	**25**	**50**	**100**
Max. acceleration torque (max. 1000 cycles per hour)	T_{2B}	Nm	11.5	10.5	11.5	11.5	10.5
		in.lb	102	93	102	102	93
Nominal output torque (with n_{1N})	T_{2N}	Nm	5.7	5.2	5.7	5.7	5.2
		in.lb	50	46	50	50	46
Emergency stop torque (permitted 1000 times during the service life of the gearhead)	T_{2Not}	Nm	26	26	26	26	26
		in.lb	230	230	230	230	230
Nominal input speed (with T_{2N} and 20°C ambient temperature) [a]	n_{1N}	rpm	4000	4000	4000	4000	4000
Max. input speed	n_{1Max}	rpm	8000	8000	8000	8000	8000
Mean no load running torque (with n_1 = 3000 rpm and 20°C gearhead temperature)	T_{012}	Nm	0.05	0.05	0.05	0.05	0.05
		in.lb	0.44	0.44	0.44	0.44	0.44
Max. torsional backlash	j_t	arcmin	≤ 20		≤ 25		
Torsional rigidity	C_{t21}	Nm/ arcmin	0.58	0.52	0.58	0.58	0.52
		in.lb/ arcmin	5.1	4.6	5.1	5.1	4.6
Max. axial force [b]	F_{2AMax}	N	230		230		
		lb_f	51		51		
Max. radial force [b]	F_{2RMax}	N	200		200		
		lb_f	45		45		
Efficiency at full load	η	%	97		95		
Service life (For calculation, see the Chapter "Information")	L_h	h	> 20000		> 20000		
Weight incl. standard adapter plate	m	kg	0.31		0.52		
		lb_m	0.69		1.15		
Operating noise (with n_1 = 3000 rpm no load)	L_{PA}	dB(A)	≤ 66				
Max. permitted housing temperature		°C	+90				
		F	194				
Ambient temperature		°C	0 to +40				
		F	32 to 104				
Lubrication			Lubricated for life				
Paint			Alu, polished				
Direction of rotation			Motor and gearhead same direction				
Protection class			IP 64				
Moment of inertia (relates to the drive)	J_1	$kgcm^2$	0.041	0.041	0.041	0.041	0.041
		10^{-3} in.lb.s²	0.036	0.036	0.036	0.036	0.036

[a] For higher ambient temperatures, please reduce input speed
[b] Relates to center of the output shaft or flange, at 100 rpm

1-stage:

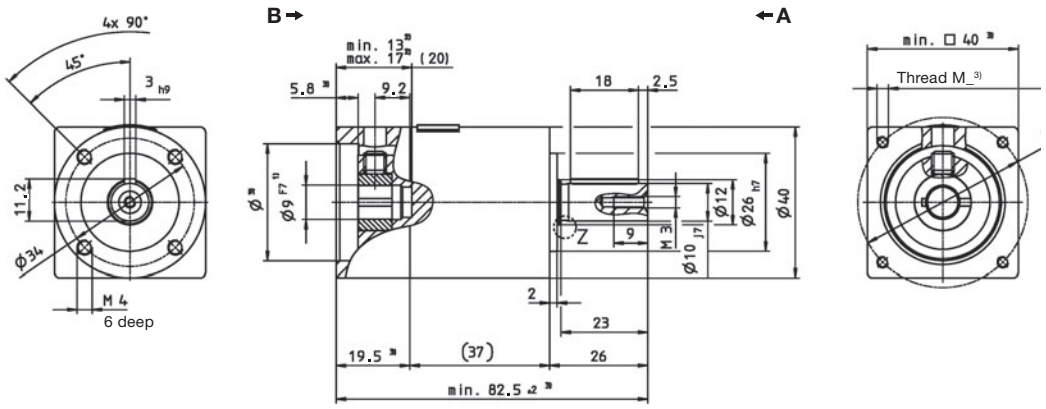

2-stage:

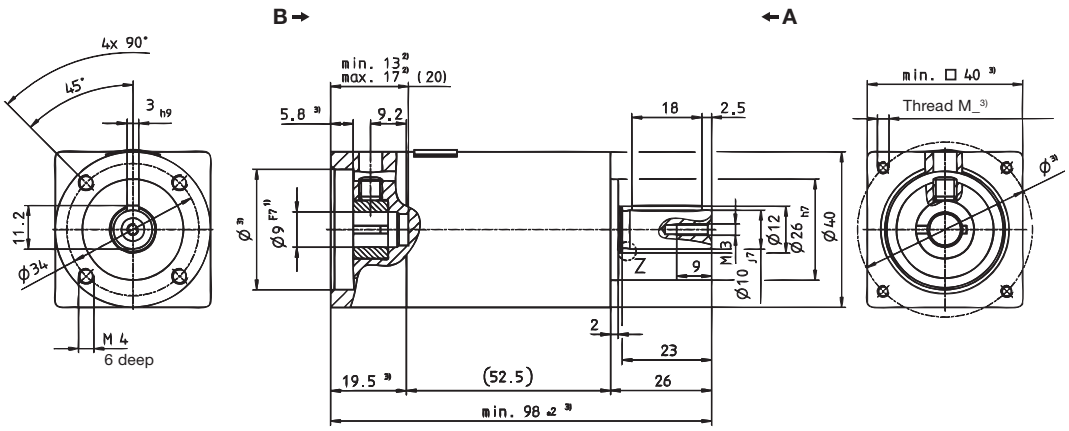

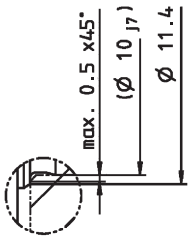

Z: Detail

Non-tolerated dimensions ±1 mm

1) Check motor shaft fit.
2) Min./Max. permissible motor shaft length. Longer motor shafts are adaptable, please contact us.
3) The dimensions depend on the motor.
4) Smaller motor shaft diameter is compensated by a bushing.

⚠ Motor mounting according to operating manual

			1-stage		2-stage		
Ratio	***i***		**5**	**10**	**25**	**50**	**100**
Max. acceleration torque (max. 1000 cycles per hour)	T_{2B}	Nm	32	29	32	32	29
		in.lb	283	257	283	283	257
Nominal output torque (with n_{1N})	T_{2N}	Nm	16	15	16	16	15
		in.lb	142	133	142	142	133
Emergency stop torque (permitted 1000 times during the service life of the gearhead)	T_{2Not}	Nm	75	75	75	75	75
		in.lb	664	664	664	664	664
Nominal input speed (with T_{2N} and 20°C ambient temperature) [a]	n_{1N}	rpm	3700	3700	3700	3700	3700
Max. input speed	n_{1Max}	rpm	6000	6000	6000	6000	6000
Mean no load running torque (with n_1 = 3000 rpm and 20°C gearhead temperature)	T_{012}	Nm	0.11	0.11	0.11	0.11	0.11
		in.lb	0.97	0.97	0.97	0.97	0.97
Max. torsional backlash	j_t	arcmin	≤ 20		≤ 25		
Torsional rigidity	C_{t21}	Nm/ arcmin	2.1	1.9	2.1	2.1	1.9
		in.lb/ arcmin	19	17	19	19	17
Max. axial force [b]	F_{2AMax}	N	750		750		
		lb_f	169		169		
Max. radial force [b]	F_{2RMax}	N	650		650		
		lb_f	146		146		
Efficiency at full load	η	%	97		95		
Service life (For calculation, see the Chapter "Information")	L_h	h	> 20000		> 20000		
Weight incl. standard adapter plate	m	kg	0.88		1.1		
		lb_m	1.9		2.4		
Operating noise (with n_1 = 3000 rpm no load)	L_{PA}	dB(A)	≤ 68				
Max. permitted housing temperature		°C	+90				
		F	194				
Ambient temperature		°C	0 to +40				
		F	32 to 104				
Lubrication			Lubricated for life				
Paint			Alu, polished				
Direction of rotation			Motor and gearhead same direction				
Protection class			IP 64				
Moment of inertia (relates to the drive)	J_1	$kgcm^2$	0.17	0.17	0.17	0.17	0.17
		10^{-3} in.lb.s²	0.15	0.15	0.15	0.15	0.15

[a] For higher ambient temperatures, please reduce input speed
[b] Relates to center of the output shaft or flange, at 100 rpm

1-stage:

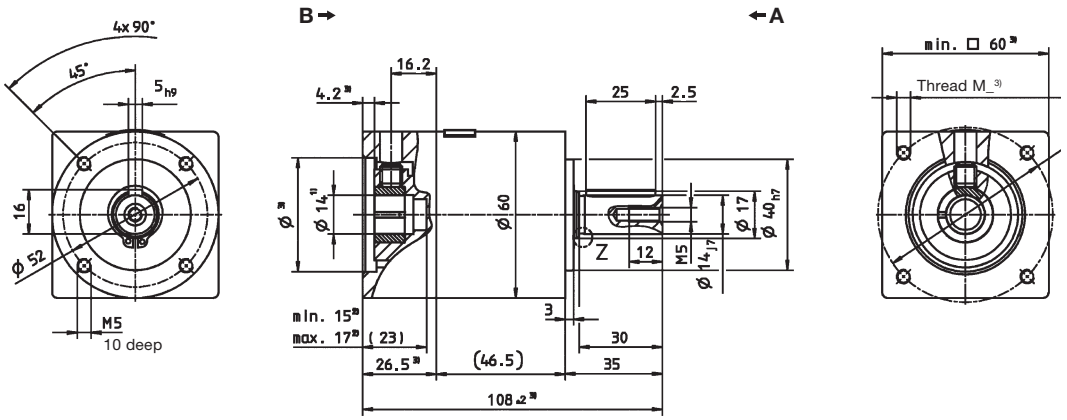

2-stage:

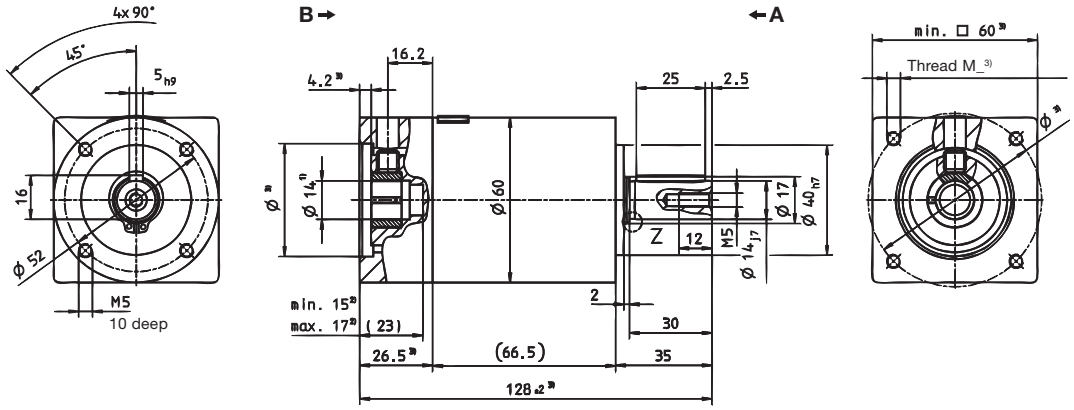

Z: Detail

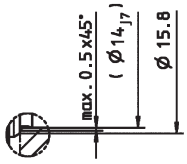

Non-tolerated dimensions ±1 mm

1) Check motor shaft fit.
2) Min./Max. permissible motor shaft length. Longer motor shafts are adaptable, please contact us.
3) The dimensions depend on the motor.
4) Smaller motor shaft diameter is compensated by a bushing.

⚠ Motor mounting according to operating manual

			1-stage		2-stage		
Ratio	***i***		**5**	**10**	**25**	**50**	**100**
Max. acceleration torque (max. 1000 cycles per hour)	T_{2B}	Nm	80	72	80	80	72
		in.lb	708	637	708	708	637
Nominal output torque (with n_{1N})	T_{2N}	Nm	40	35	40	40	35
		in.lb	354	310	354	354	310
Emergency stop torque (permitted 1000 times during the service life of the gearhead)	T_{2Not}	Nm	190	190	190	190	190
		in.lb	1682	1682	1682	1682	1682
Nominal input speed (with T_{2N} and 20°C ambient temperature) [a]	n_{1N}	rpm	3400	3400	3400	3400	3400
Max. input speed	n_{1Max}	rpm	6000	6000	6000	6000	6000
Mean no load running torque (with n_1 = 3000 rpm and 20°C gearhead temperature)	T_{012}	Nm	0.28	0.28	0.28	0.28	0.28
		in.lb	2.5	2.5	2.5	2.5	2.5
Max. torsional backlash	j_t	arcmin	≤ 20		≤ 25		
Torsional rigidity	C_{t21}	Nm/ arcmin	6.1	5.5	6.1	6.1	5.5
		in.lb/ arcmin	54	49	54	54	48.9
Max. axial force [b]	F_{2AMax}	N	1600		1600		
		lb_f	360		360		
Max. radial force [b]	F_{2RMax}	N	1200		1200		
		lb_f	270		270		
Efficiency at full load	η	%	97		95		
Service life (For calculation, see the Chapter "Information")	L_h	h	> 20000		> 20000		
Weight incl. standard adapter plate	m	kg	2.1		2.8		
		lb_m	4.6		6.2		
Operating noise (with n_1 = 3000 rpm no load)	L_{PA}	dB(A)	≤ 70				
Max. permitted housing temperature		°C	+90				
		F	194				
Ambient temperature		°C	0 to +40				
		F	32 to 104				
Lubrication			Lubricated for life				
Paint			Alu, polished				
Direction of rotation			Motor and gearhead same direction				
Protection class			IP 64				
Moment of inertia (relates to the drive)	J_1	$kgcm^2$	0.54	0.54	0.54	0.54	0.54
		10^{-3} in.lb.s²	0.48	0.48	0.48	0.48	0.48

[a] For higher ambient temperatures, please reduce input speed
[b] Relates to center of the output shaft or flange, at 100 rpm

View A View B

1-stage:

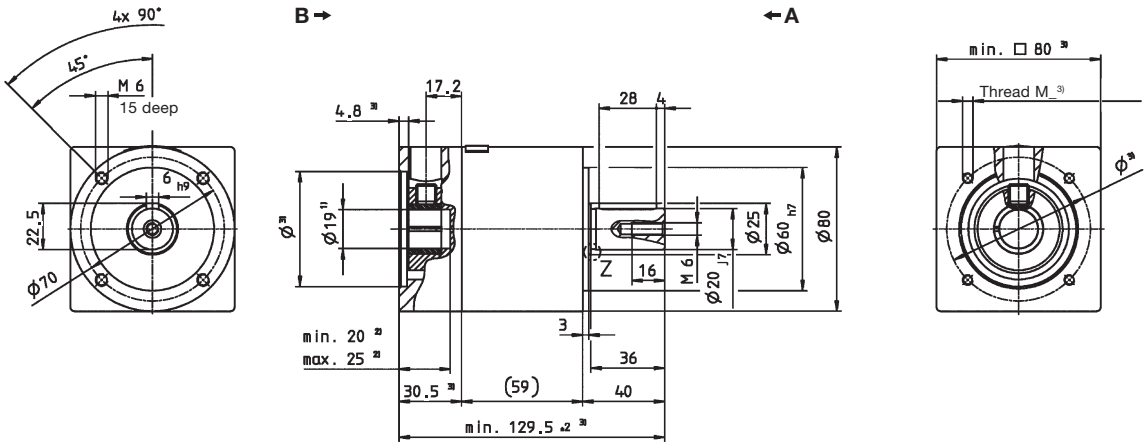

2-stage:

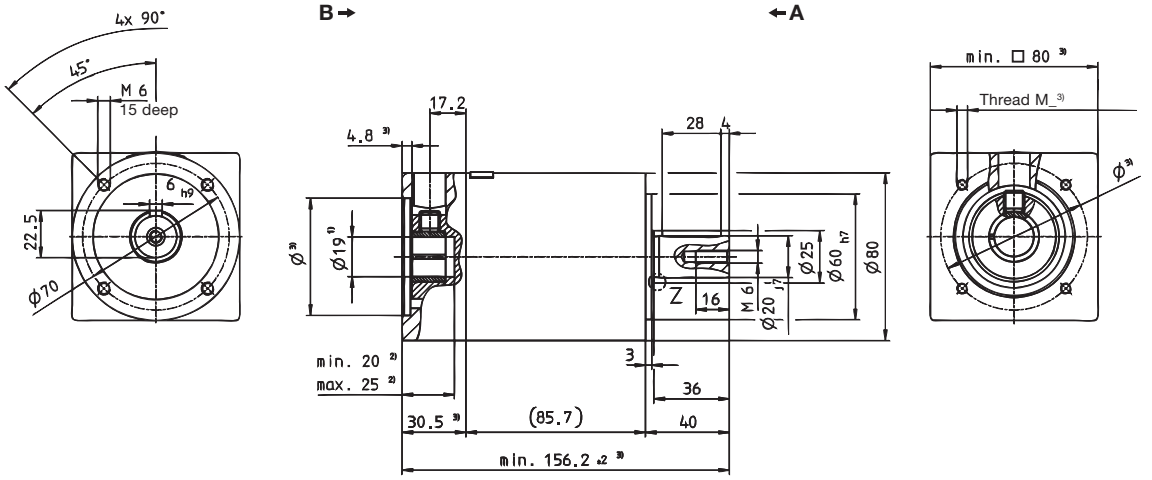

Z: Detail

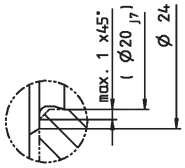

Non-tolerated dimensions ±1 mm

1) Check motor shaft fit.
2) Min./Max. permissible motor shaft length. Longer motor shafts are adaptable, please contact us.
3) The dimensions depend on the motor.
4) Smaller motor shaft diameter is compensated by a bushing.

⚠ Motor mounting according to operating manual

			1-stage		2-stage		
Ratio	***i***		**5**	**10**	**25**	**50**	**100**
Max. acceleration torque (max. 1000 cycles per hour)	T_{2B}	Nm	200	180	200	200	180
		in.lb	1770	1593	1770	1770	1593
Nominal output torque (with n_{1N})	T_{2N}	Nm	100	90	100	100	90
		in.lb	885	797	885	885	797
Emergency stop torque (permitted 1000 times during the service life of the gearhead)	T_{2Not}	Nm	480	480	480	480	480
		in.lb	4248	4248	4248	4248	4248
Nominal input speed (with T_{2N} and 20°C ambient temperature) [a]	n_{1N}	rpm	2600	2600	2600	2600	2600
Max. input speed	n_{1Max}	rpm	4800	4800	4800	4800	4800
Mean no load running torque (with n_1 = 3000 rpm and 20°C gearhead temperature)	T_{012}	Nm	0.5	0.5	0.5	0.5	0.5
		in.lb	4.4	4.4	4.4	4.4	4.4
Max. torsional backlash	j_t	arcmin	≤ 20		≤ 25		
Torsional rigidity	C_{t21}	Nm/ arcmin	16.5	14.5	16.5	16.5	14.5
		in.lb/ arcmin	146	128	146	146	128
Max. axial force [b]	F_{2AMax}	N	2100		2100		
		lb_f	472		472		
Max. radial force [b]	F_{2RMax}	N	1550		1550		
		lb_f	349		349		
Efficiency at full load	η	%	97		95		
Service life (For calculation, see the Chapter "Information")	L_h	h	> 20000		> 20000		
Weight incl. standard adapter plate	*m*	kg	5.2		6.9		
		lb_m	11.5		15.2		
Operating noise (with n_1 = 3000 rpm no load)	L_{PA}	dB(A)	≤ 72				
Max. permitted housing temperature		°C	+90				
		F	194				
Ambient temperature		°C	0 to +40				
		F	32 to 104				
Lubrication			Lubricated for life				
Paint			Alu, polished				
Direction of rotation			Motor and gearhead same direction				
Protection class			IP 64				
Moment of inertia (relates to the drive)	J_1	$kgcm^2$	1.82	1.82	1.82	1.82	1.82
		10^{-3} in.lb.s²	1.61	1.61	1.61	1.61	1.61

[a] For higher ambient temperatures, please reduce input speed
[b] Relates to center of the output shaft or flange, at 100 rpm

View A View B

1-stage:

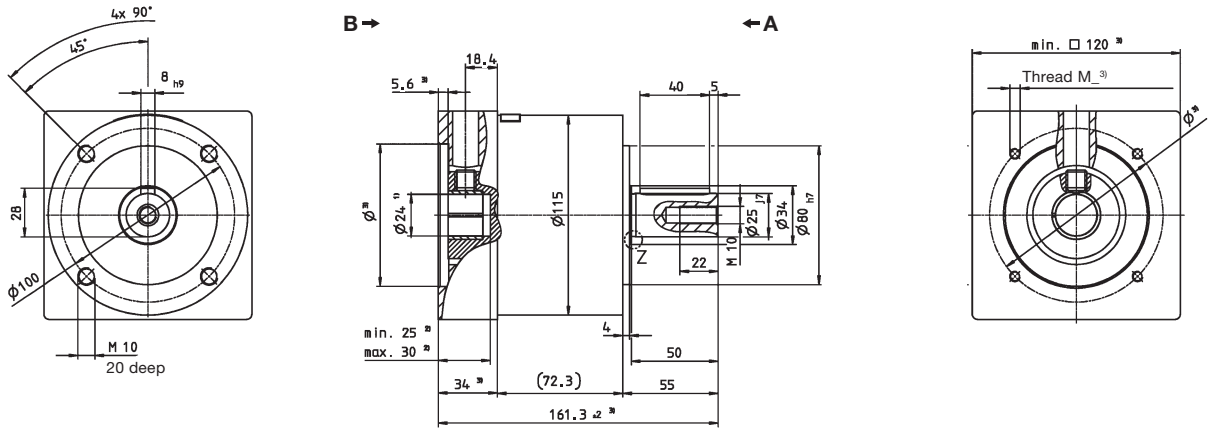

2-stage:

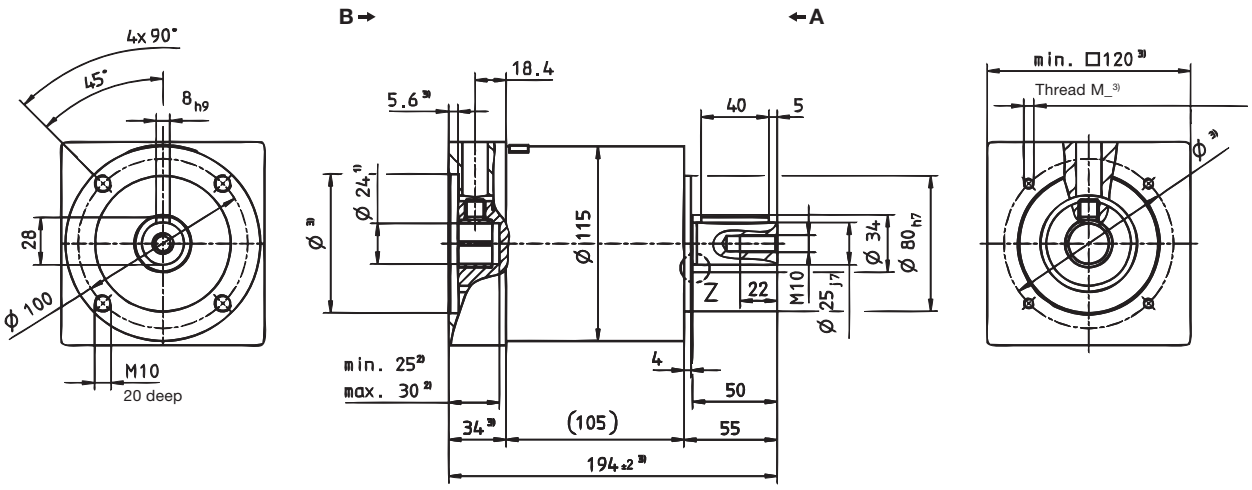

Z: Detail

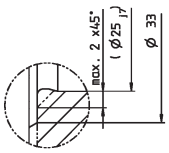

Non-tolerated dimensions ±1 mm

1) Check motor shaft fit.
2) Min./Max. permissible motor shaft length. Longer motor shafts are adaptable, please contact us.
3) The dimensions depend on the motor.
4) Smaller motor shaft diameter is compensated by a bushing.

⚠ Motor mounting according to operating manual

Just around the corner – Servo right-angle systems for increased efficiency.

Manufacturers of flexible, high-quality machines with a wide range of functions are extremely demanding when it comes to drive systems: Maximum dynamics and performance density, minimal space and monitoring requirements, extremely smooth-running and robust, simple setup, maintenance-free are just some of the many requirements. Servo right-angle systems by WITTENSTEIN alpha fulfill all these expectations – and even go one step further: Sensational results and an excellent design.

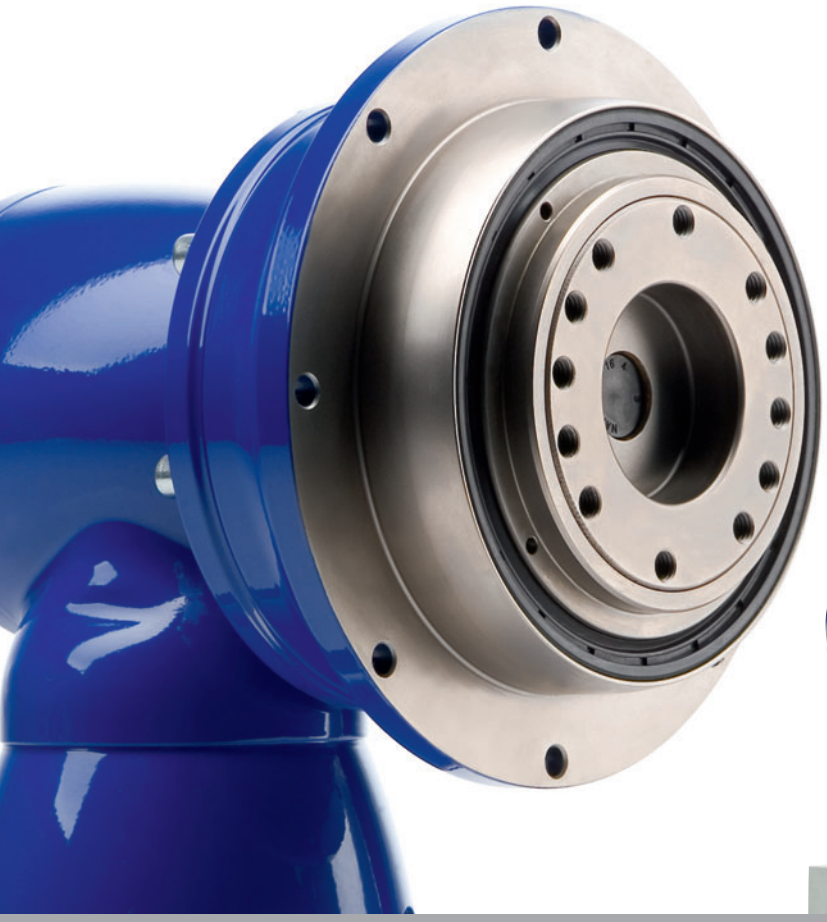

TK+ **TPK+** **SK+**



Servo right-angle gearheads

Increased productivity

Do you need a machine that operates at maximum productivity? Your servo right-angle gearhead offers 200 % more torque, 100 % faster speeds than equivalent products and thus creates the perfect conditions for maximum manufacturing efficiency.

SPK+ HG+ LK+ LPK+ V-DRIVE®

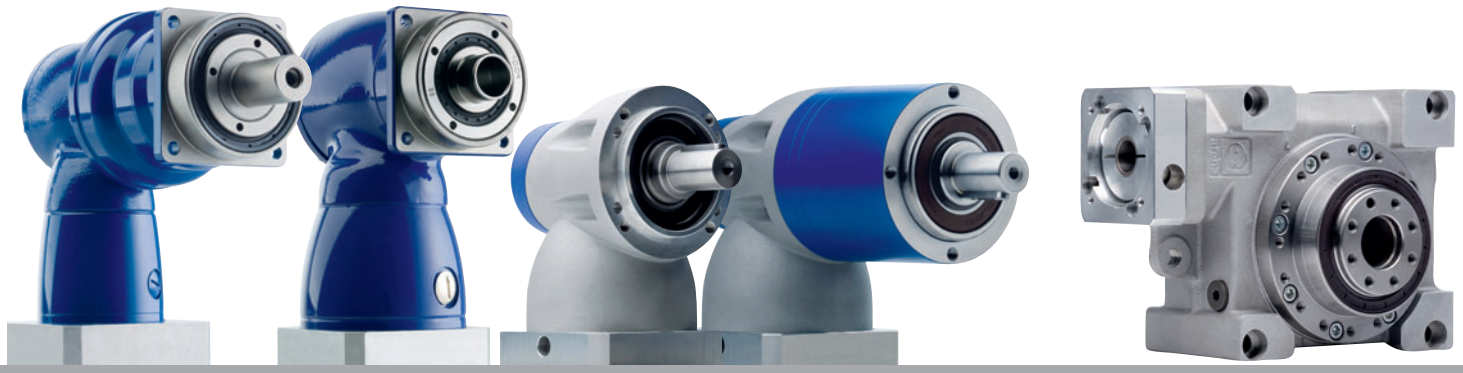

Simple and convenient

From an optimized design with our cymex® software to the classic, patented WITTENSTEIN alpha motor attachment and an oil volume adapted to each model – WITTENSTEIN alpha right-angle gearheads make your life so much easier.

Reliable and accurate

The low torsional backlash and high torsional rigidity of your WITTENSTEIN alpha right-angle gearhead assure maximum positioning accuracy of your drives and precision of your machines – even during highly dynamic operation up to 50,000 cycles/hour.

Maximum durability

Your WITTENSTEIN alpha right-angle gearhead is extremely reliable due to the overall design and 100 % WITTENSTEIN alpha inspections: **“fit it and forget it”**. A length compensation feature integrated in your WITTENSTEIN alpha right-angle gearhead as standard maximizes the lifespan of your servo motor during high-speed continuous operation.



TK+/TPK+ – The successor to our versatile hypoid gearhead with TP+ compatible output flange and hollow shaft, with optional planetary

TK+/TPK+

Details



TK+ 004 1/2-stage

					1-stage					2-stage									
Ratio [a]			*i*		**3**	**4**	**5**	**7**	**10**	**12**	**16**	**20**	**25**	**28**	**35**	**40**	**50**	**70**	**100**
Max. acceleration torque (max. 1000 cycles per hour)			T_{2B}	Nm	30	30	30	25	20	30	30	30	30	30	30	30	30	25	20
				in.lb	266	266	266	221	177	266	266	266	266	266	266	266	266	221	177
Nominal output torque (with n_{1N})			T_{2N}	Nm	22	22	22	20	15	22	22	22	22	22	22	22	22	20	15
				in.lb	195	195	195	177	133	195	195	195	195	195	195	195	195	177	133
Emergency stop torque (permitted 1000 times during the service life of the gearhead)			T_{2Not}	Nm	40	50	50	45	40	50	50	50	50	50	50	50	50	45	40
				in.lb	354	443	443	398	354	443	443	443	443	443	443	443	443	398	354
Nominal input speed (with T_{2N} and 20°C ambient temperature) [b], [c]			n_{1N}	rpm	2200	2400	2700	2700	2700	4400	4400	4400	4400	4400	4400	4400	4800	5500	5500
Max. continuous speed (with 20 % T_{2N} and 20°C ambient temperature)			n_{1Ncym}	rpm	2700	3100	3600	3100	3100	For higher speeds, please contact us.									
Max. input speed			n_{1Max}	rpm	6000	6000	6000	6000	6000	6000	6000	6000	6000	6000	6000	6000	6000	6000	6000
Mean no load running torque (with n_1 = 3000 rpm and 20°C gearhead temperature) [d]			T_{012}	Nm	1.4	1.3	1.2	1.4	1.3	0.2	0.2	0.2	0.2	0.2	0.2	0.1	0.1	0.1	0.1
				in.lb	12.4	11.5	10.6	12.4	11.5	1.8	1.8	1.8	1.8	1.8	1.8	0.9	0.9	0.9	0.9
Max. torsional backlash			j_t	arcmin	≤ 5														
Torsional rigidity			C_{t21}	Nm/ arcmin	2.6	2.8	3.0	2.6	2.3	2.8	2.8	2.8	2.8	2.8	2.8	2.8	3.0	2.6	2.3
				in.lb/ arcmin	23	25	26	23	20	25	25	25	25	25	25	25	26	23	20
Max. axial force [e]			F_{2AMax}	N	2400														
				lb_f	540														
Max. radial force [e]			F_{2RMax}	N	2700														
				lb_f	608														
Max. tilting moment			M_{2KMax}	Nm	251														
				in.lb	2220														
Efficiency at full load			η	%	96					94									
Service life (For calculation, see the Chapter "Information")			L_h	h	> 20000														
Weight incl. standard adapter plate			*m*	kg	2.9					3.2									
				lb_m	6.4					7.1									
Operating noise (with n_1 = 3000 rpm no load)			L_{PA}	dB(A)	≤ 64														
Max. permitted housing temperature				°C	+90														
				F	194														
Ambient temperature				°C	0 to +40														
				F	32 to 104														
Lubrication					Lubricated for life														
Paint					Blue RAL 5002														
Direction of rotation					Motor and gearhead opposite directions														
Protection class					IP 65														
Moment of inertia (relates to the drive) Clamping hub diameter [mm]	B	11	J_1	kgcm²	–	–	–	–	–	0.09	0.09	0.08	0.07	0.06	0.06	0.06	0.06	0.06	0.06
				10^{-3} in.lb.s²						0.08	0.08	0.07	0.07	0.06	0.06	0.05	0.05	0.05	0.05
	C	14	J_1	kgcm²	0.57	0.46	0.41	0.37	0.35	0.21	0.20	0.19	0.19	0.18	0.18	0.17	0.17	0.17	0.17
				10^{-3} in.lb.s²	0.50	0.41	0.36	0.33	0.31	0.18	0.18	0.17	0.17	0.16	0.16	0.15	0.15	0.15	0.15
	E	19	J_1	kgcm²	0.92	0.82	0.76	0.72	0.70	–	–	–	–	–	–	–	–	–	–
				10^{-3} in.lb.s²	0.81	0.72	0.68	0.64	0.62										

[a] Other ratios available on request
[b] Higher speeds are possible if the nominal torque is reduced
[c] For higher ambient temperatures, please reduce input speed
[d] Idling torques decrease during operation
[e] Refers to center of the output shaft or flange

Please contact us for information on the best configuration for S1 conditions of use (continuous operation).

1-stage:

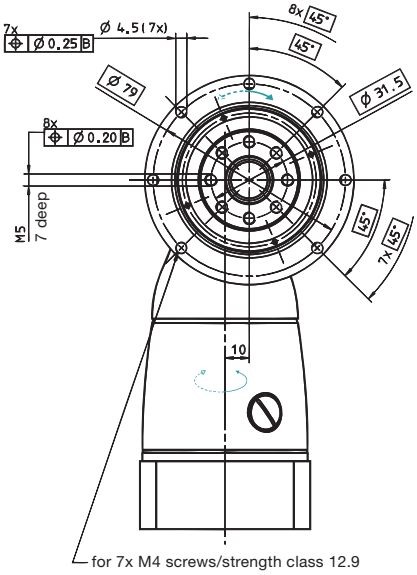

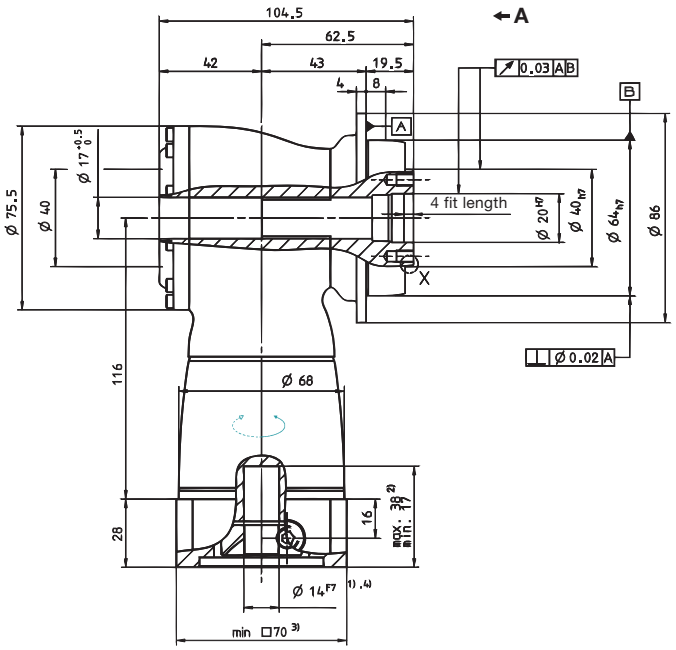

2-stage:

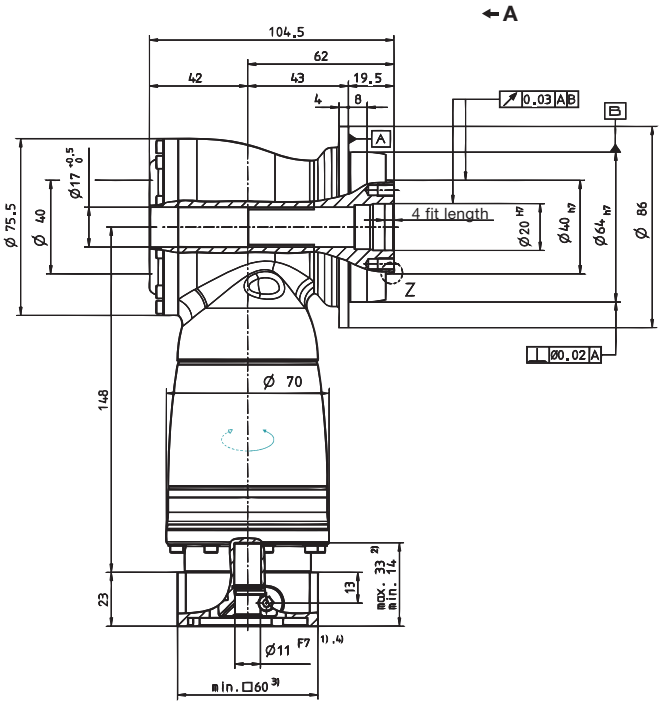

Z: Detail

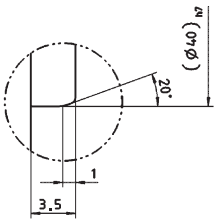

See technical data sheet for available clamping hub diameters (mass moment of inertia). Dimensions available on request.

Non-tolerated dimensions ±1 mm

1) Check motor shaft fit.
2) Min./Max. permissible motor shaft length. Longer motor shafts are adaptable, please contact us.
3) The dimensions depend on the motor.
4) Smaller motor shaft diameter is compensated by a bushing with a minimum thickness of 1 mm.

⚠ Motor mounting according to operating manual

TK+ 010 1/2-stage

					1-stage					2-stage									
Ratio [a]			***i***		**3**	**4**	**5**	**7**	**10**	**12**	**16**	**20**	**25**	**28**	**35**	**40**	**50**	**70**	**100**
Max. acceleration torque (max. 1000 cycles per hour)			T_{2B}	Nm	70	70	70	60	50	70	70	70	70	70	70	70	70	60	50
				in.lb	620	620	620	531	443	620	620	620	620	620	620	620	620	531	443
Nominal output torque (with n_{1N})			T_{2N}	Nm	50	50	50	45	40	50	50	50	50	50	50	50	50	45	40
				in.lb	443	443	443	398	354	443	443	443	443	443	443	443	443	398	354
Emergency stop torque (permitted 1000 times during the service life of the gearhead)			T_{2Not}	Nm	95	115	115	110	100	115	115	115	115	115	115	115	115	110	100
				in.lb	841	1018	1018	974	885	1018	1018	1018	1018	1018	1018	1018	1018	974	885
Nominal input speed (with T_{2N} and 20°C ambient temperature) [b], [c]			n_{1N}	rpm	2100	2200	2500	2500	2500	3500	3500	3500	3500	3500	3500	3500	3800	4500	4500
Max. continuous speed (with 20 % T_{2N} and 20°C ambient temperature)			n_{1Ncym}	rpm	2700	3100	3600	3100	3100	For higher speeds, please contact us.									
Max. input speed			n_{1Max}	rpm	6000	6000	6000	6000	6000	6000	6000	6000	6000	6000	6000	6000	6000	6000	6000
Mean no load running torque (with n_1 = 3000 rpm and 20°C gearhead temperature) [d]			T_{012}	Nm	2.4	2.0	1.8	2.4	2.2	0.4	0.4	0.3	0.3	0.3	0.3	0.1	0.1	0.1	0.1
				in.lb	21	18	16	21	19	3.5	3.5	2.7	2.7	2.7	2.7	0.9	0.9	0.9	0.9
Max. torsional backlash			j_t	arcmin	≤ 4														
Torsional rigidity			C_{t21}	Nm/ arcmin	6.0	7.0	8.0	8.0	8.0	7.0	7.0	7.0	7.0	7.0	7.0	7.0	8.0	8.0	8.0
				in.lb/ arcmin	53	62	71	71	71	62	62	62	62	62	62	62	71	71	71
Max. axial force [e]			F_{2AMax}	N	3400														
				lb_f	765														
Max. radial force [e]			F_{2RMax}	N	4000														
				lb_f	900														
Max. tilting moment			M_{2KMax}	Nm	437														
				in.lb	3867														
Efficiency at full load			η	%	96					94									
Service life (For calculation, see the Chapter "Information")			L_h	h	> 20000														
Weight incl. standard adapter plate			m	kg	5.3					6.1									
				lb_m	11.7					13.5									
Operating noise (with n_1 = 3000 rpm no load)			L_{PA}	dB(A)	≤ 66														
Max. permitted housing temperature				°C	+90														
				F	194														
Ambient temperature				°C	0 to +40														
				F	32 to 104														
Lubrication					Lubricated for life														
Paint					Blue RAL 5002														
Direction of rotation					Motor and gearhead opposite directions														
Protection class					IP 65														
Moment of inertia (relates to the drive) Clamping hub diameter [mm]	C	14	J_1	kgcm²	–	–	–	–	–	0.31	0.28	0.24	0.23	0.21	0.20	0.19	0.18	0.18	0.18
				10^{-3} in.lb.s²						0.27	0.25	0.21	0.21	0.18	0.18	0.17	0.16	0.16	0.16
	E	19	J_1	kgcm²	1.81	1.39	1.18	1.02	0.93	0.75	0.72	0.68	0.68	0.63	0.63	0.63	0.63	0.63	0.63
				10^{-3} in.lb.s²	1.60	1.23	1.05	0.90	0.82	0.64	0.64	0.61	0.60	0.59	0.55	0.56	0.56	0.55	0.55
	H	28	J_1	kgcm²	3.22	2.80	2.60	2.43	2.34	–	–	–	–	–	–	–	–	–	–
				10^{-3} in.lb.s²	2.85	2.48	2.30	2.15	2.07										

[a] Other ratios available on request
[b] Higher speeds are possible if the nominal torque is reduced
[c] For higher ambient temperatures, please reduce input speed
[d] Idling torques decrease during operation
[e] Refers to center of the output shaft or flange

Please contact us for information on the best configuration for S1 conditions of use (continuous operation).

1-stage:

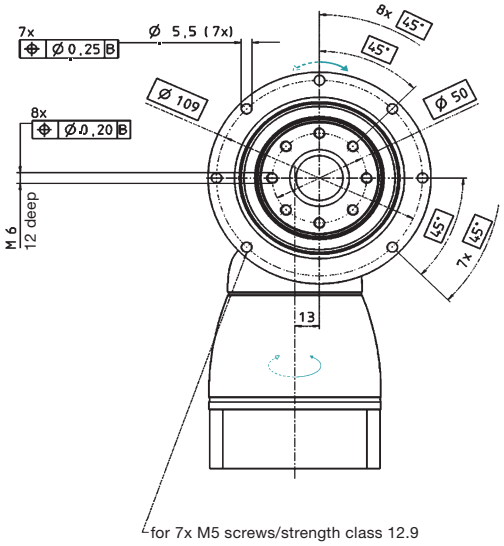

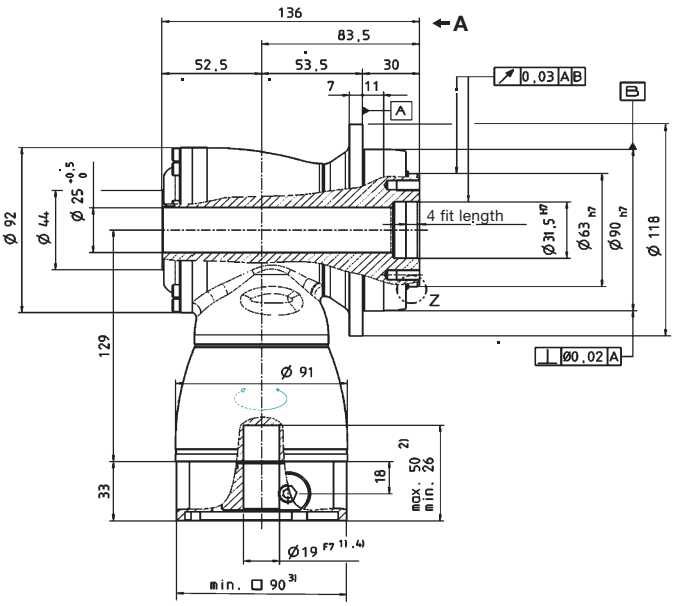

2-stage:

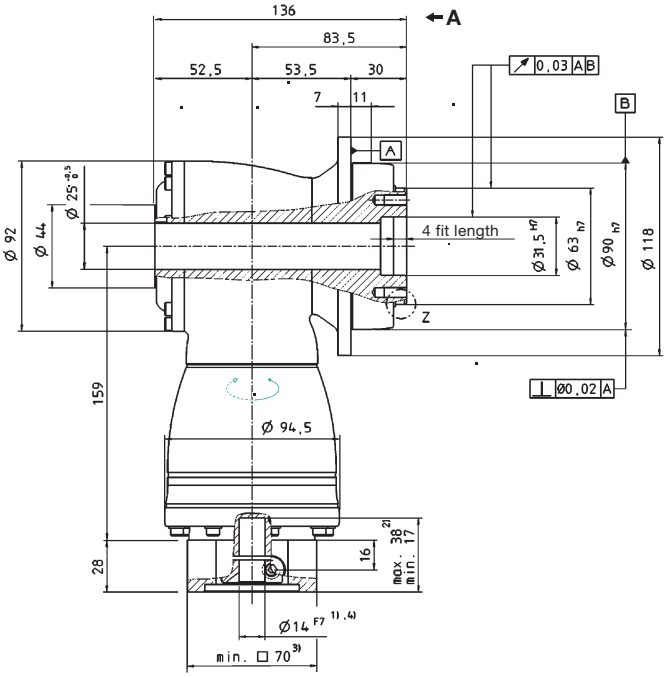

Z: Detail

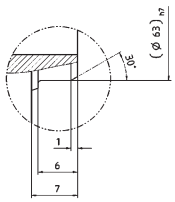

See technical data sheet for available clamping hub diameters (mass moment of inertia). Dimensions available on request.

Non-tolerated dimensions ±1 mm

1) Check motor shaft fit.
2) Min./Max. permissible motor shaft length. Longer motor shafts are adaptable, please contact us.
3) The dimensions depend on the motor.
4) Smaller motor shaft diameter is compensated by a bushing with a minimum thickness of 1 mm.

⚠ Motor mounting according to operating manual

TK+ 025 1/2-stage

					1-stage					2-stage									
Ratio [a]			*i*		**3**	**4**	**5**	**7**	**10**	**12**	**16**	**20**	**25**	**28**	**35**	**40**	**50**	**70**	**100**
Max. acceleration torque (max. 1000 cycles per hour)			T_{2B}	Nm	170	170	170	145	125	170	170	170	170	170	170	170	170	145	125
				in.lb	1505	1505	1505	1283	1106	1505	1505	1505	1505	1505	1505	1505	1505	1283	1106
Nominal output torque (with n_{1N})			T_{2N}	Nm	100	100	100	90	80	100	100	100	100	100	100	100	100	90	80
				in.lb	885	885	885	797	708	885	885	885	885	885	885	885	885	797	708
Emergency stop torque (permitted 1000 times during the service life of the gearhead)			T_{2Not}	Nm	220	260	260	255	250	260	260	260	260	260	260	260	260	255	250
				in.lb	1947	2301	2301	2257	2213	2301	2301	2301	2301	2301	2301	2301	2301	2257	2213
Nominal input speed (with T_{2N} and 20°C ambient temperature) [b), c)]			n_{1N}	rpm	2000	2100	2400	2200	2200	3100	3100	3100	3100	3100	3100	3100	3500	4200	4200
Max. continuous speed (with 20 % T_{2N} and 20°C ambient temperature)			n_{1Ncym}	rpm	2700	3000	3400	3000	3000	For higher speeds, please contact us.									
Max. input speed			n_{1Max}	rpm	4500	4500	4500	4500	4500	4500	4500	4500	4500	4500	4500	4500	4500	4500	4500
Mean no load running torque (with n_1 = 3000 rpm and 20°C gearhead temperature) [d)]			T_{012}	Nm	4.6	3.6	2.8	4.2	3.4	0.7	0.7	0.6	0.5	0.5	0.4	0.2	0.2	0.2	0.2
				in.lb	41	32	25	37	30	6.2	6.2	5.3	4.4	4.4	3.5	1.8	1.8	1.8	1.8
Max. torsional backlash			j_t	arcmin	≤ 4														
Torsional rigidity			C_{t21}	Nm/ arcmin	12	13	16	16	16	13	13	13	13	13	13	13	16	16	16
				in.lb/ arcmin	106	115	142	142	142	115	115	115	115	115	115	115	142	142	142
Max. axial force [e)]			F_{2AMax}	N	5700														
				lb_f	1283														
Max. radial force [e)]			F_{2RMax}	N	6300														
				lb_f	1418														
Max. tilting moment			M_{2KMax}	Nm	833														
				in.lb	7370														
Efficiency at full load			η	%	96					94									
Service life (For calculation, see the Chapter "Information")			L_h	h	> 20000														
Weight incl. standardadapter plate			*m*	kg	8.9					10.6									
				lb_m	20					23									
Operating noise (with n_1 = 3000 rpm no load)			L_{PA}	dB(A)	≤ 66														
Max. permitted housing temperature				°C	+90														
				F	194														
Ambient temperature				°C	0 to +40														
				F	32 to 104														
Lubrication					Lubricated for life														
Paint					Blue RAL 5002														
Direction of rotation					Motor and gearhead opposite directions														
Protection class					IP 65														
Moment of inertia (relates to the drive) Clamping hub diameter [mm]	E	19	J_1	kgcm²	–	–	–	–	–	1.08	1.01	0.88	0.85	0.76	0.75	0.70	0.69	0.69	0.68
				10^{-3} in.lb.s²						0.96	0.89	0.78	0.75	0.67	0.66	0.62	0.66	0.61	0.60
	G	24	J_1	kgcm²	–	–	–	–	–	2.65	2.57	2.44	2.42	2.32	2.31	2.26	2.25	2.25	2.25
				10^{-3} in.lb.s²						2.34	2.28	2.16	2.14	2.06	2.05	2.00	2.00	1.99	1.99
	H	28	J_1	kgcm²	5.50	4.30	3.60	3.10	2.90	–	–	–	–	–	–	–	–	–	–
				10^{-3} in.lb.s²	4.83	3.77	3.22	2.77	2.54										
	K	38	J_1	kgcm²	12.7	11.5	10.9	10.4	10.1	–	–	–	–	–	–	–	–	–	–
				10^{-3} in.lb.s²	11.2	10.2	9.63	9.19	8.95										

[a)] Other ratios available on request
[b)] Higher speeds are possible if the nominal torque is reduced
[c)] For higher ambient temperatures, please reduce input speed
[d)] Idling torques decrease during operation
[e)] Refers to center of the output shaft or flange

Please contact us for information on the best configuration for S1 conditions of use (continuous operation).

1-stage:

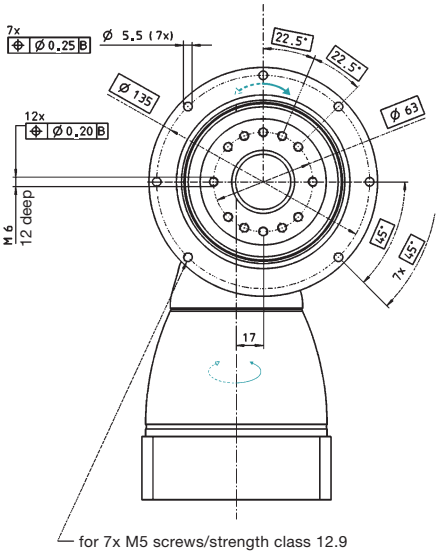

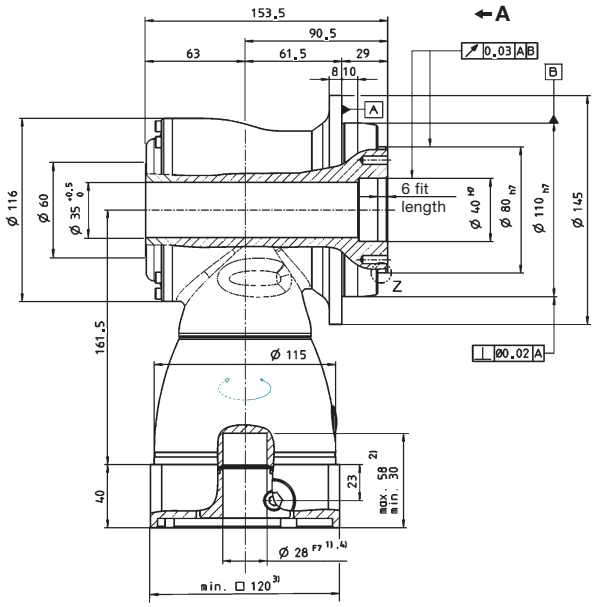

2-stage:

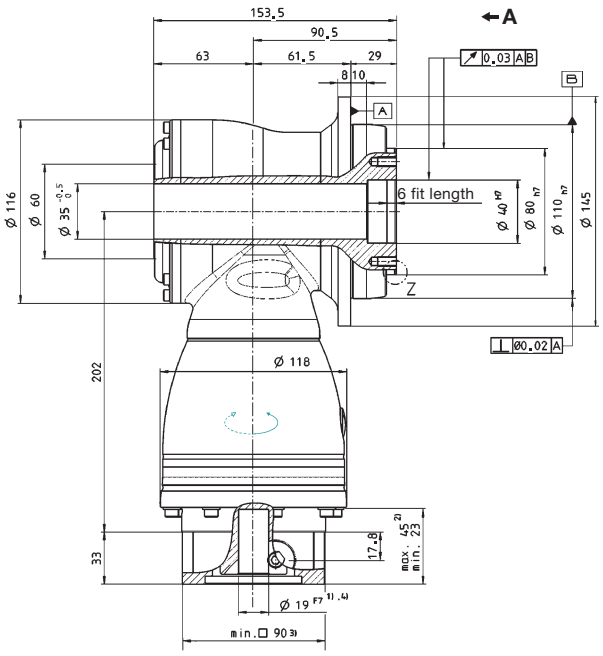

Z: Detail

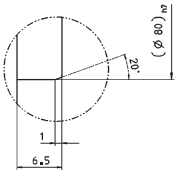

See technical data sheet for available clamping hub diameters (mass moment of inertia). Dimensions available on request.

Non-tolerated dimensions ±1 mm

1) Check motor shaft fit.
2) Min./Max. permissible motor shaft length. Longer motor shafts are adaptable, please contact us.
3) The dimensions depend on the motor.
4) Smaller motor shaft diameter is compensated by a bushing with a minimum thickness of 1 mm.

⚠ Motor mounting according to operating manual

TK+ 050 1/2-stage

				1-stage					2-stage									
Ratio [a]			*i*	**3**	**4**	**5**	**7**	**10**	**12**	**16**	**20**	**25**	**28**	**35**	**40**	**50**	**70**	**100**
Max. acceleration torque (max. 1000 cycles per hour)			T_{2B} Nm	300	300	300	250	210	300	300	300	300	300	300	300	300	250	210
			in.lb	2655	2655	2655	2213	1859	2655	2655	2655	2655	2655	2655	2655	2655	2213	1859
Nominal output torque (with n_{1N})			T_{2N} Nm	190	190	190	175	160	190	190	190	190	190	190	190	190	175	160
			in.lb	1682	1682	1682	1549	1416	1682	1682	1682	1682	1682	1682	1682	1682	1549	1416
Emergency stop torque (permitted 1000 times during the service life of the gearhead)			T_{2Not} Nm	400	500	500	450	400	500	500	500	500	500	500	500	500	450	400
			in.lb	3540	4425	4425	3983	3540	4425	4425	4425	4425	4425	4425	4425	4425	3983	3540
Nominal input speed (with T_{2N} and 20°C ambient temperature) [b), c)]			n_{1N} rpm	1700	1800	2000	1800	1800	2900	2900	2900	2900	2900	2900	2900	3200	3200	3900
Max. continuous speed (with 20 % T_{2N} and 20°C ambient temperature)			n_{1Ncym} rpm	2200	2500	2800	2500	2500	For higher speeds, please contact us.									
Max. input speed			n_{1Max} rpm	4500	4500	4500	4500	4500	4500	4500	4500	4500	4500	4500	4500	4500	4500	4500
Mean no load running torque (with n_1 = 3000 rpm and 20°C gearhead temperature) [d]			T_{012} Nm	8.4	6.2	5.4	9.0	6.6	1.7	1.1	0.8	0.6	0.6	0.5	0.5	0.4	0.4	0.4
			in.lb	74	55	48	80	58	15.0	9.7	7.1	5.3	5.3	4.4	4.4	3.5	3.5	3.5
Max. torsional backlash			j_t arcmin	≤ 4														
Torsional rigidity			C_{t21} Nm/ arcmin	36	40	46	44	42	40	40	40	40	40	40	40	46	44	42
			in.lb/ arcmin	315	356	405	387	376	356	356	356	356	356	356	356	405	387	376
Max. axial force [e]			F_{2AMax} N	9900														
			lb_f	2228														
Max. radial force [e]			F_{2RMax} N	9500														
			lb_f	2138														
Max. tilting moment			M_{2KMax} Nm	1692														
			in.lb	14974														
Efficiency at full load			η %	96					94									
Service life (For calculation, see the Chapter "Information")			L_h h	> 20000														
Weight incl. standardadapter plate			m kg	22					26									
			lb_m	49					57									
Operating noise (with n_1 = 3000 rpm no load)			L_{PA} dB(A)	≤ 68														
Max. permitted housing temperature			°C	+90														
			F	194														
Ambient temperature			°C	0 to +40														
			F	32 to 104														
Lubrication				Lubricated for life														
Paint				Blue RAL 5002														
Direction of rotation				Motor and gearhead opposite directions														
Protection class				IP 65														
Moment of inertia (relates to the drive) Clamping hub diameter [mm]	G	24	J_1 kgcm²	–	–	–	–	–	4.43	3.97	3.36	3.22	2.82	2.75	2.50	2.47	2.44	2.42
			10^{-3} in.lb.s²						3.92	3.51	2.97	2.85	2.50	2.44	2.22	2.18	2.16	2.14
	K	38	J_1 kgcm²	28.4	21.0	17.6	14.7	13.1	11.3	10.9	10.3	10.1	9.74	9.66	9.41	9.38	9.35	9.33
			10^{-3} in.lb.s²	25.1	18.6	15.5	13.0	11.6	10.0	9.63	9.09	8.96	8.62	8.55	8.33	8.30	8.28	8.26

[a] Other ratios available on request
[b] Higher speeds are possible if the nominal torque is reduced
[c] For higher ambient temperatures, please reduce input speed
[d] Idling torques decrease during operation
[e] Refers to center of the output shaft or flange

Please contact us for information on the best configuration for S1 conditions of use (continuous operation).

1-stage:

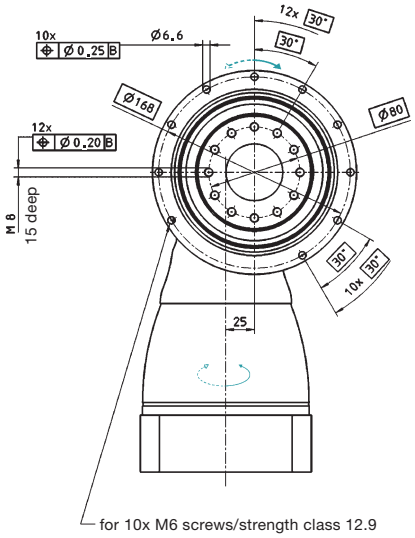

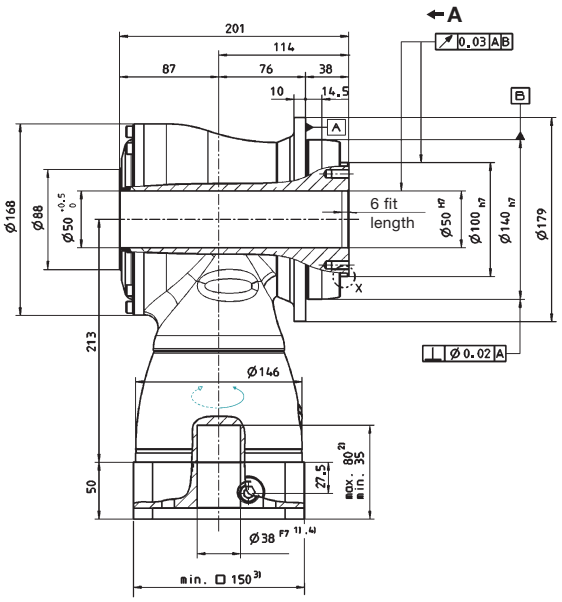

2-stage:

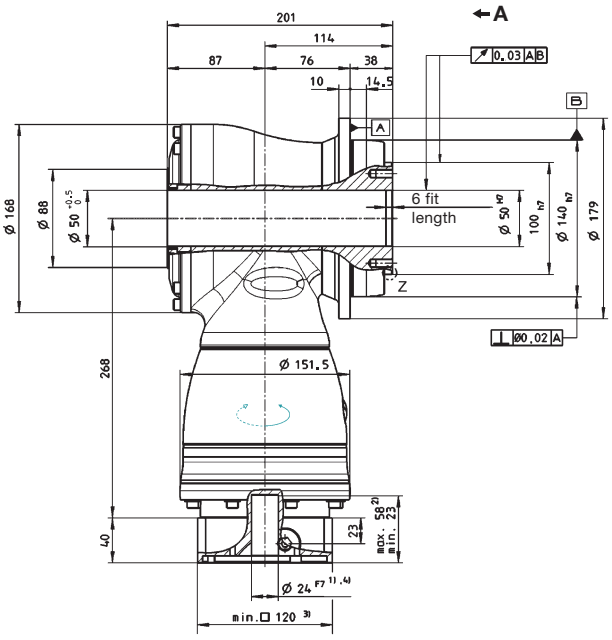

Z: Detail

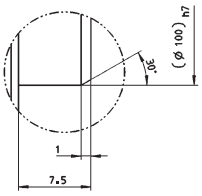

See technical data sheet for available clamping hub diameters (mass moment of inertia). Dimensions available on request.

Non-tolerated dimensions ±1 mm

1) Check motor shaft fit.
2) Min./Max. permissible motor shaft length. Longer motor shafts are adaptable, please contact us.
3) The dimensions depend on the motor.
4) Smaller motor shaft diameter is compensated by a bushing with a minimum thickness of 1 mm.

⚠ Motor mounting according to operating manual

TK+ 110 1/2-stage

			1-stage					2-stage									
Ratio [a]	i		**3**	**4**	**5**	**7**	**10**	**12**	**16**	**20**	**25**	**28**	**35**	**40**	**50**	**70**	**100**
Max. acceleration torque (max. 1000 cycles per hour)	T_{2B}	Nm	640	640	640	550	470	640	640	640	640	640	640	640	640	550	470
		in.lb	5664	5664	5664	4868	4160	5664	5664	5664	5664	5664	5664	5664	5664	4868	4160
Nominal output torque (with n_{1N})	T_{2N}	Nm	400	400	400	380	360	400	400	400	400	400	400	400	400	380	360
		in.lb	3540	3540	3540	3363	3186	3540	3540	3540	3540	3540	3540	3540	3540	3363	3186
Emergency stop torque (permitted 1000 times during the service life of the gearhead)	T_{2Not}	Nm	900	1050	1050	970	900	1050	1050	1050	1050	1050	1050	1050	1050	970	900
		in.lb	7965	9293	9293	8585	7965	9293	9293	9293	9293	9293	9293	9293	9293	8585	7965
Nominal input speed (with T_{2N} and 20°C ambient temperature) [b], [c]	n_{1N}	rpm	1400	1600	1800	1600	1600	2700	2700	2700	2700	2700	2700	2700	2900	3200	3400
Max. continuous speed (with 20 % T_{2N} and 20°C ambient temperature)	n_{1Ncym}	rpm	1800	2100	2500	2200	2200	For higher speeds, please contact us.									
Max. input speed	n_{1Max}	rpm	4000	4000	4000	4000	4000	4000	4000	4000	4000	4000	4000	4000	4000	4000	4000
Mean no load running torque (with n_1 = 3000 rpm and 20°C gearhead temperature) [d]	T_{012}	Nm	17.5	14.5	12.0	18.0	15.0	3.6	2.8	2.2	1.9	1.6	1.4	1.1	1.1	1.1	1.1
		in.lb	155	128	106	159	133	31.9	24.8	19.5	16.8	14.2	12.4	9.7	9.7	9.7	9.7
Max. torsional backlash	j_t	arcmin	≤ 4														
Torsional rigidity	C_{t21}	Nm/ arcmin	76	87	99	97	96	87	87	87	87	87	87	87	99	97	96
		in.lb/ arcmin	676	766	874	860	847	356	766	766	766	766	766	766	874	860	847
Max. axial force [e]	F_{2AMax}	N	14200														
		lb_f	3195														
Max. radial force [e]	F_{2RMax}	N	14700														
		lb_f	3308														
Max. tilting moment	M_{2KMax}	Nm	3213														
		in.lb	28435														
Efficiency at full load	η	%	96					94									
Service life (For calculation, see the Chapter "Information")	L_h	h	> 20000														
Weight incl. standardadapter plate	m	kg	48					54									
		lb_m	106					119									
Operating noise (with n_1 = 3000 rpm no load)	L_{PA}	dB(A)	≤ 68														
Max. permitted housing temperature		°C	+90														
		F	194														
Ambient temperature		°C	0 to +40														
		F	32 to 104														
Lubrication			Lubricated for life														
Paint			Blue RAL 5002														
Direction of rotation			Motor and gearhead opposite directions														
Protection class			IP 65														
Moment of inertia (relates to the drive) Clamping hub diameter [mm]	K 38	J_1	kgcm²	–	–	–	–	–	16.8	14.8	12.9	12.3	11.2	10.9	10.3	10.1	10.0	9.93
			10^{-3} in.lb.s²						14.8	13.1	11.4	10.9	9.88	9.63	9.08	8.95	8.84	8.79
	M 48	J_1	kgcm²	96.5	64.6	50.5	38.2	31.8	31.5	29.5	27.6	27.0	25.9	25.6	25.0	24.8	24.7	24.6
			10^{-3} in.lb.s²	85.4	57.2	44.7	33.8	28.1	27.9	26.1	24.4	23.9	22.9	22.6	22.1	22.0	21.9	21.8

[a] Other ratios available on request
[b] Higher speeds are possible if the nominal torque is reduced
[c] For higher ambient temperatures, please reduce input speed
[d] Idling torques decrease during operation
[e] Refers to center of the output shaft or flange

Please contact us for information on the best configuration for S1 conditions of use (continuous operation).

1-stage:

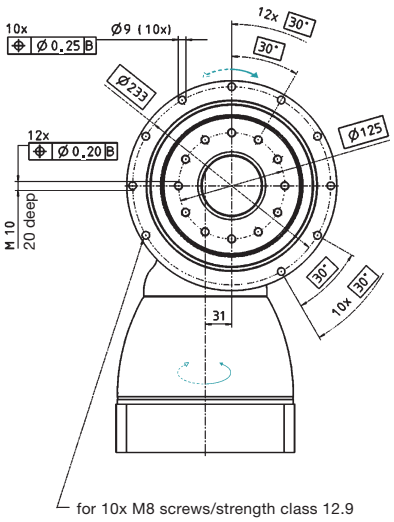

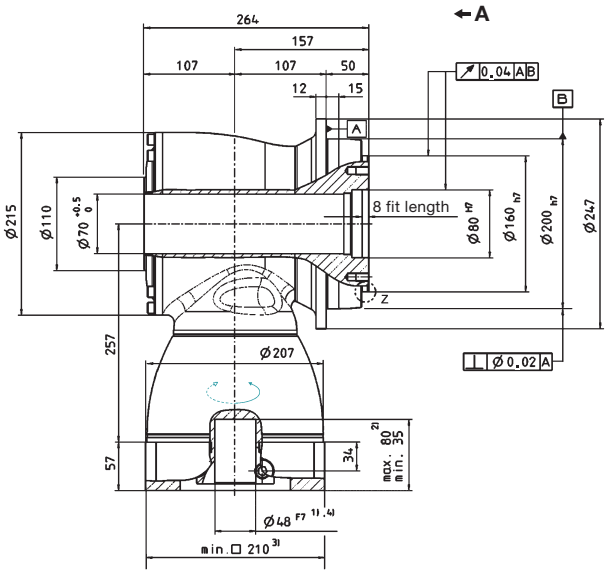

2-stage:

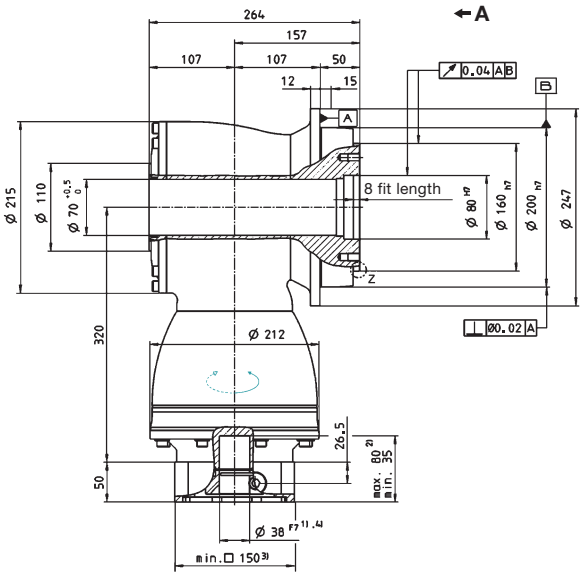

Z: Detail

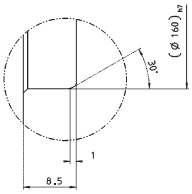

See technical data sheet for available clamping hub diameters (mass moment of inertia). Dimensions available on request.

Non-tolerated dimensions ±1 mm

1) Check motor shaft fit.
2) Min./Max. permissible motor shaft length. Longer motor shafts are adaptable, please contact us.
3) The dimensions depend on the motor.
4) Smaller motor shaft diameter is compensated by a bushing with a minimum thickness of 1 mm.

⚠ Motor mounting according to operating manual

TPK+ 010 2-stage

				2-stage									
Ratio [a]			*i*	**12**	**16**	**20**	**25**	**28**	**35**	**40**	**50**	**70**	**100**
Max. acceleration torque (max. 1000 cycles per hour)			T_{2B} Nm	120	120	130	130	130	125	80	100	130	100
			in.lb	1062	1062	1151	1151	1151	1106	780	885	1151	885
Nominal output torque (with n_{1N})			T_{2N} Nm	75	75	75	75	75	75	60	75	75	60
			in.lb	664	664	664	664	531	664	531	664	664	531
Emergency stop torque (permitted 1000 times during the service life of the gearhead)			T_{2Not} Nm	160	160	200	200	250	175	120	150	210	200
			in.lb	1416	1416	1770	1770	2213	1549	1062	1328	1859	1770
Nominal input speed (with T_{2N} and 20°C ambient temperature) [b), c)]			n_{1N} rpm	2000	2400	2400	2700	2400	2500	2500	2500	2500	2500
Max. continuous speed (with 20 % T_{2N} and 20°C ambient temperature)			n_{1Ncym} rpm	3000	3400	3400	3800	3400	3200	3200	3200	3200	3200
Max. input speed			n_{1Max} rpm	6000	6000	6000	6000	6000	6000	6000	6000	6000	6000
Mean no load running torque (with n_1=3000 rpm and 20°C gearhead temperature) [d)]			T_{012} Nm	1.5	1.3	1.2	1.2	1.2	1.3	1.3	1.3	1.3	1.3
			in.lb	13.3	11.5	10.6	10.6	10.6	11.5	11.5	11.5	11.5	11.5
Max. torsional backlash			j_t arcmin	Standard ≤ 6 / Reduced ≤ 4									
Torsional rigidity			C_{t21} Nm/ arcmin	–	–	–	–	–	–	–	–	–	22
			in.lb/ arcmin										195
Max. axial force [e)]			F_{2AMax} N	2150									
			lb_f	483.75									
Max. tilting moment			M_{2KMax} Nm	235									
			in.lb	2080									
Efficiency at full load			η %	94									
Service life (For calculation, see the Chapter "Information")			L_h h	> 20000									
Weight incl. standard adapter plate			*m* kg	5.2									
			lb_m	11.5									
Operating noise (with n_1=3000 rpm no load)			L_{PA} dB(A)	≤ 66									
Max. permitted housing temperature			°C	+90									
			F	194									
Ambient temperature			°C	0 to +40									
			F	32 to 104									
Lubrication				Lubricated for life									
Paint				Blue RAL 5002									
Direction of rotation				Motor and gearhead opposite directions									
Protection class				IP 65									
Moment of inertia (relates to the drive) Clamping hub diameter [mm]	C	14	J_1 kgcm²	0.55	0.46	0.44	0.39	0.43	0.36	0.34	0.34	0.34	0.34
			10^{-3} in.lb.s²	0.49	0.40	0.39	0.35	0.38	0.32	0.30	0.30	0.30	0.30
	E	19	*J* kgcm²	0.90	0.81	0.79	0.75	0.78	0.71	0.70	0.70	0.69	0.69
			10^{-3} in.lb.s²	0.80	0.72	0.70	0.66	0.69	0.63	0.62	0.62	0.61	0.61

[a)] Other ratios up to i=1000 available on request
[b)] Higher speeds are possible if the nominal torque is reduced
[c)] For higher ambient temperatures, please reduce input speed
[d)] Idling torques decrease during operation
[e)] Refers to center of the output shaft or flange

Please contact us for information on the best configuration for S1 conditions of use (continuous operation).

2-stage:

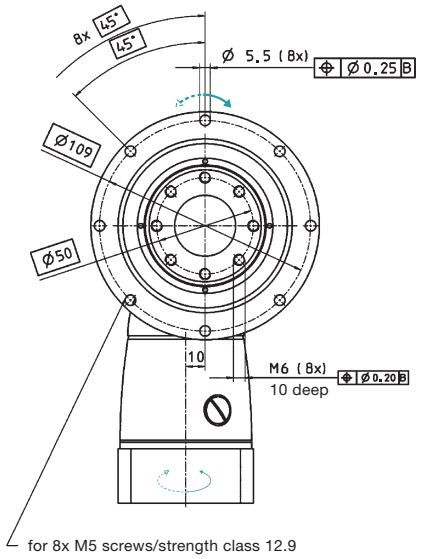

←A

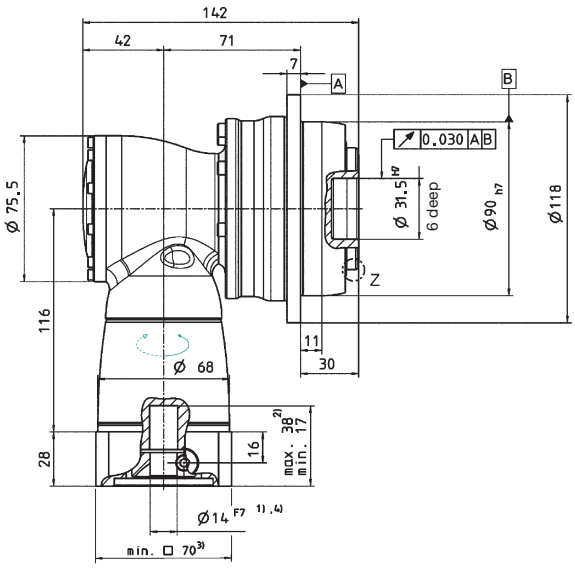

Z: Detail

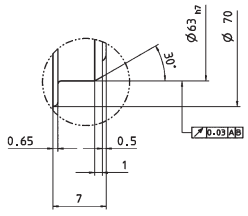

See technical data sheet for available clamping hub diameters (mass moment of inertia). Dimensions available on request.

Non-tolerated dimensions ±1 mm

1) Check motor shaft fit.
2) Min./Max. permissible motor shaft length. Longer motor shafts are adaptable, please contact us.
3) The dimensions depend on the motor.
4) Smaller motor shaft diameter is compensated by a bushing with a minimum thickness of 1 mm.

⚠ Motor mounting according to operating manual

				2-stage									
Ratio [a]			*i*	**12**	**16**	**20**	**25**	**28**	**35**	**40**	**50**	**70**	**100**
Max. acceleration torque (max. 1000 cycles per hour)			T_{2B} Nm	280	280	350	350	330	250	330	265	400	400
			T_{2B} in.lb	2478	2478	3098	3098	2920	2213	2921	2345	3540	3540
Nominal output torque (with n_{1N})			T_{2N} Nm	170	170	170	170	170	170	160	170	170	120
			T_{2N} in.lb	1505	1505	1505	1505	1505	1505	1505	1505	1505	1062
Emergency stop torque (permitted 1000 times during the service life of the gearhead)			T_{2Not} Nm	400	400	500	500	625	500	400	500	625	500
			T_{2Not} in.lb	3540	3540	4425	4425	5531	4425	3540	4425	5531	4425
Nominal input speed (with T_{2N} and 20°C ambient temperature) [b], [c]			n_{1N} rpm	2000	2400	2400	2700	2400	2500	2500	2500	2500	2500
Max. continuous speed (with 20 % T_{2N} and 20°C ambient temperature)			n_{1Ncym} rpm	3000	3400	3400	3800	3400	3200	3200	3200	3200	3200
Max. input speed			n_{1Max} rpm	6000	6000	6000	6000	6000	6000	6000	6000	6000	6000
Mean no load running torque (with n_1 = 3000 rpm and 20°C gearhead temperature) [d]			T_{012} Nm	2.5	2.1	2.0	1.8	2.0	2.2	2.0	2.0	2.0	2.0
			T_{012} in.lb	22.1	18.6	17.7	15.9	17.7	19.5	17.7	17.7	17.7	17.7
Max. torsional backlash			j_t arcmin	Standard ≤ 4 / Reduced ≤ 2									
Torsional rigidity			C_{t21} Nm/ arcmin	–	–	–	–	–	–	–	–	–	–
			C_{t21} in.lb/ arcmin										
Max. axial force [e]			F_{2AMax} N	4150									
			F_{2AMax} lb_f	934									
Max. tilting moment			M_{2KMax} Nm	413									
			M_{2KMax} in.lb	3655									
Efficiency at full load			η %	94									
Service life (For calculation, see the Chapter "Information")			L_h h	> 20000									
Weight incl. standard adapter plate			m kg	9.0									
			m lb_m	19.9									
Operating noise (with n_1 = 3000 rpm no load)			L_{PA} dB(A)	≤ 68									
Max. permitted housing temperature			°C	+90									
			F	194									
Ambient temperature			°C	0 to +40									
			F	32 to 104									
Lubrication				Lubricated for life									
Paint				Blue RAL 5002									
Direction of rotation				Motor and gearhead opposite directions									
Protection class				IP 65									
Moment of inertia (relates to the drive) Clamping hub diameter [mm]	E	19	J_1 kgcm²	1.43	1.18	1.16	1.04	1.14	0.94	0.89	0.89	0.89	0.89
			J_1 10^{-3} in.lb.s²	1.27	1.04	1.02	0.92	1.01	0.83	0.79	0.79	0.79	0.78
	H	28	J_1 kgcm²	2.85	2.59	2.57	2.45	2.56	2.36	2.31	2.30	2.30	2.30
			J_1 10^{-3} in.lb.s²	2.52	2.29	2.27	2.17	2.26	2.08	2.04	2.04	2.04	2.04

[a] Other ratios up to i=1000 available on request
[b] Higher speeds are possible if the nominal torque is reduced
[c] For higher ambient temperatures, please reduce input speed
[d] Idling torques decrease during operation
[e] Refers to center of the output shaft or flange

Please contact us for information on the best configuration for S1 conditions of use (continuous operation).

2-stage:

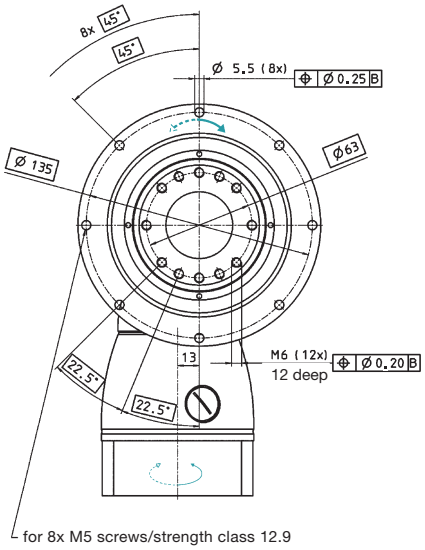

←A

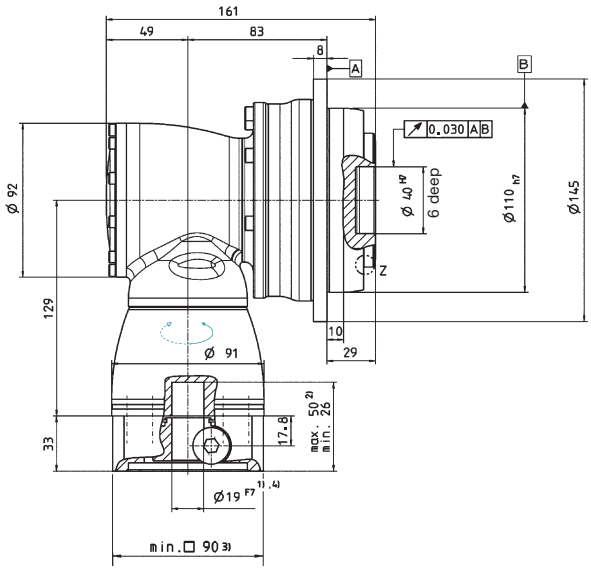

Z: Detail

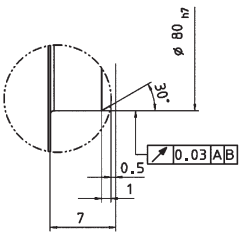

See technical data sheet for available clamping hub diameters (mass moment of inertia). Dimensions available on request.

Non-tolerated dimensions ±1 mm

1) Check motor shaft fit.
2) Min./Max. permissible motor shaft length. Longer motor shafts are adaptable, please contact us.
3) The dimensions depend on the motor.
4) Smaller motor shaft diameter is compensated by a bushing with a minimum thickness of 1 mm.

⚠ Motor mounting according to operating manual

TPK+ 050 2-stage

				2-stage									
Ratio [a]			***i***	**12**	**16**	**20**	**25**	**28**	**35**	**40**	**50**	**70**	**100**
Max. acceleration torque (max. 1000 cycles per hour)			T_{2B} Nm	680	680	700	700	700	700	500	625	700	540
			T_{2B} in.lb	6018	6018	6195	6195	6195	6195	4425	5531	6195	4779
Nominal output torque (with n_{1N})			T_{2N} Nm	370	370	370	370	370	370	320	370	370	240
			T_{2N} in.lb	3275	3275	3275	3275	3275	3275	2832	3275	3275	2124
Emergency stop torque (permitted 1000 times during the service life of the gearhead)			T_{2Not} Nm	1000	1000	1250	1250	1250	1250	1000	1250	1250	1000
			T_{2Not} in.lb	8850	8850	11063	11063	11063	11063	8850	11063	11063	8850
Nominal input speed (with T_{2N} and 20°C ambient temperature) [b), c)]			n_{1N} rpm	1900	2300	2300	2600	2300	2300	2300	2300	2300	2300
Max. continuous speed (with 20 % T_{2N} and 20°C ambient temperature)			n_{1Ncym} rpm	2700	3100	3100	3500	3100	3000	3000	3000	3000	3000
Max. input speed			n_{1Max} rpm	4500	4500	4500	4500	4500	4500	4500	4500	4500	4500
Mean no load running torque (with n_1 = 3000 rpm and 20°C gearhead temperature) [d)]			T_{012} Nm	4.0	3.7	3.6	2.8	3.5	3.9	3.1	3.1	3.1	3.1
			T_{012} in.lb	35.4	32.7	31.9	24.8	31.0	34.5	27.4	27.4	27.4	27.4
Max. torsional backlash			j_t arcmin	Standard ≤ 4 / Reduced ≤ 2									
Torsional rigidity			C_{t21} Nm/ arcmin	–	–	–	–	–	–	–	–	–	124
			C_{t21} in.lb/ arcmin										1097
Max. axial force [e)]			F_{2AMax} N	6130									
			F_{2AMax} lb_f	1379									
Max. tilting moment			M_{2KMax} Nm	1295									
			M_{2KMax} in.lb	11461									
Efficiency at full load			η %	94									
Service life (For calculation, see the Chapter "Information")			L_h h	> 20000									
Weight incl. standard adapter platee			m kg	17.0									
			m lb_m	38									
Operating noise (with n_1 = 3000 rpm no load)			L_{PA} dB(A)	≤ 68									
Max. permitted housing temperature			°C	+90									
			F	194									
Ambient temperature			°C	0 to +40									
			F	32 to 104									
Lubrication				Lubricated for life									
Paint				Blue RAL 5002									
Direction of rotation				Motor and gearhead opposite directions									
Protection class				IP 65									
Moment of inertia (relates to the drive) Clamping hub diameter [mm]	H	28	J_1 kgcm²	4.56	3.76	3.71	3.28	3.66	2.95	2.79	2.78	2.77	2.77
			J_1 10^{-3} in.lb.s²	4.04	3.32	3.28	2.90	3.24	2.61	2.47	2.46	2.45	2.45
	K	38	J_1 kgcm²	11.7	10.9	10.9	10.4	10.8	10.1	9.95	9.94	9.94	9.93
			J_1 10^{-3} in.lb.s²	10.4	9.67	9.62	9.24	9.58	8.96	8.81	8.80	8.80	8.79

[a)] Other ratios up to i=1000 available on request
[b)] Higher speeds are possible if the nominal torque is reduced
[c)] For higher ambient temperatures, please reduce input speed
[d)] Idling torques decrease during operation
[e)] Refers to center of the output shaft or flange

Please contact us for information on the best configuration for S1 conditions of use (continuous operation).

2-stage:

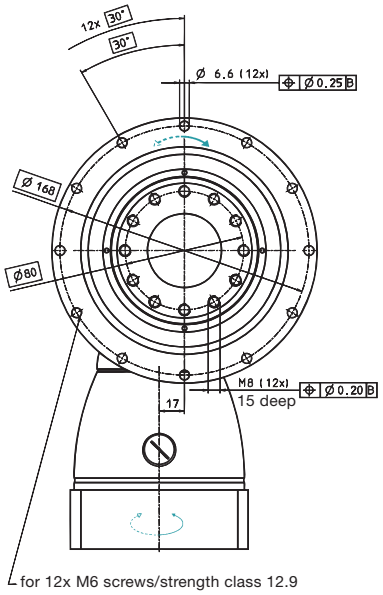

←A

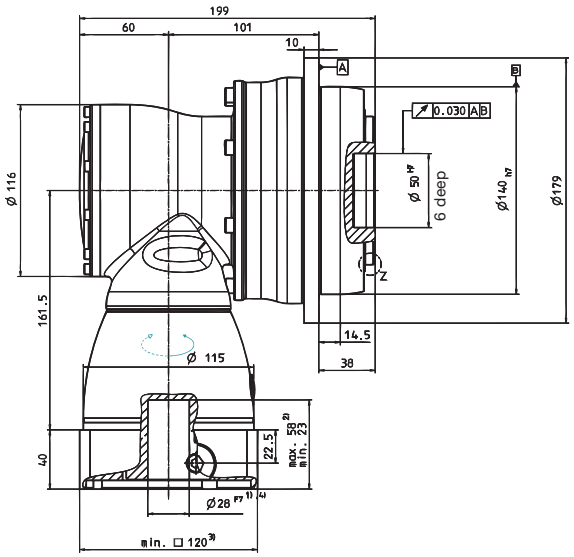

Z: Detail

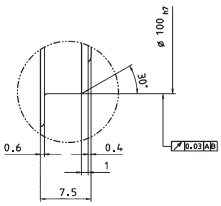

See technical data sheet for available clamping hub diameters (mass moment of inertia). Dimensions available on request.

Non-tolerated dimensions ±1 mm

1) Check motor shaft fit.
2) Min./Max. permissible motor shaft length. Longer motor shafts are adaptable, please contact us.
3) The dimensions depend on the motor.
4) Smaller motor shaft diameter is compensated by a bushing with a minimum thickness of 1 mm.

⚠ Motor mounting according to operating manual

				2-stage									
Ratio [a]	i			**12**	**16**	**20**	**25**	**28**	**35**	**40**	**50**	**70**	**100**
Max. acceleration torque (max. 1000 cycles per hour)	T_{2B}	Nm		1200	1200	1500	1500	1600	1250	840	1050	1470	1400
		in.lb		10620	10620	13275	13275	14160	11063	7434	9293	13010	12390
Nominal output torque (with n_{1N})	T_{2N}	Nm		700	700	750	750	750	750	640	750	750	750
		in.lb		6195	6195	6638	6638	6638	6638	5664	6638	6638	6638
Emergency stop torque (permitted 1000 times during the service life of the gearhead)	T_{2Not}	Nm		1600	1600	2000	2000	2750	2000	1600	2000	2750	2200
		in.lb		14160	14160	17700	17700	24338	17700	14160	17700	24338	19470
Nominal input speed (with T_{2N} and 20°C ambient temperature) [b], [c]	n_{1N}	rpm		1600	1900	1900	2100	1900	2100	2100	2100	2100	2100
Max. continuous speed (with 20 % T_{2N} and 20°C ambient temperature)	n_{1Ncym}	rpm		2300	2600	2600	2800	2600	3000	3000	3000	3000	3000
Max. input speed	n_{1Max}	rpm		4500	4500	4500	4500	4500	4500	4500	4500	4500	4500
Mean no load running torque (with n_1 = 3000 rpm and 20°C gearhead temperature) [d]	T_{012}	Nm		9.0	6.5	6.5	5.5	6.0	8.0	6.0	6.0	6.0	6.0
		in.lb		79.7	57.5	57.5	48.7	53.1	70.8	53.1	53.1	53.1	53.1
Max. torsional backlash	j_t	arcmin		Standard ≤ 4 / Reduced ≤ 2									
Torsional rigidity	C_{t21}	Nm/ arcmin		–	–	–	–	–	–	–	–	–	–
		in.lb/ arcmin											
Max. axial force [e]	F_{2AMax}	N		10050									
		lb_f		2261									
Max. tilting moment	M_{2KMax}	Nm		3064									
		in.lb		27116									
Efficiency at full load	η	%		94									
Service life (For calculation, see the Chapter "Information")	L_h	h		> 20000									
Weight incl. standard adapter plate	m	kg		41.0									
		lb_m		91									
Operating noise (with n_1 = 3000 rpm no load)	L_{PA}	dB(A)		≤ 70									
Max. permitted housing temperature		°C		+90									
		F		194									
Ambient temperature		°C		0 to +40									
		F		32 to 104									
Lubrication				Lubricated for life									
Paint				Blue RAL 5002									
Direction of rotation				Motor and gearhead opposite directions									
Protection class				IP 65									
Moment of inertia (relates to the drive) Clamping hub diameter [mm]	K	38	J_1	kgcm²	24.3	19.0	18.7	16.1	18.5	13.9	12.8	12.7	12.7	12.7
				10^{-3} in.lb.s²	21.5	16.8	16.6	14.2	16.4	12.3	11.3	11.3	11.2	11.2

[a] Other ratios up to i=1000 available on request
[b] Higher speeds are possible if the nominal torque is reduced
[c] For higher ambient temperatures, please reduce input speed
[d] Idling torques decrease during operation
[e] Refers to center of the output shaft or flange

Please contact us for information on the best configuration for S1 conditions of use (continuous operation).

2-stage:

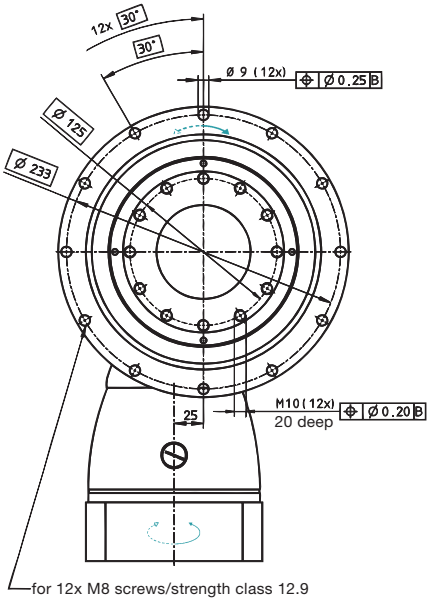

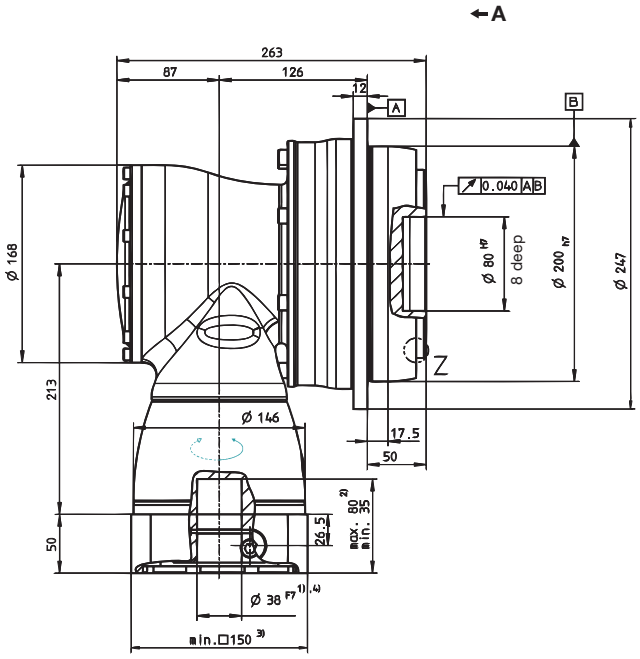

Z: Detail

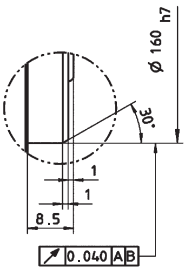

See technical data sheet for available clamping hub diameters (mass moment of inertia). Dimensions available on request.

Non-tolerated dimensions ±1 mm

1) Check motor shaft fit.
2) Min./Max. permissible motor shaft length. Longer motor shafts are adaptable, please contact us.
3) The dimensions depend on the motor.
4) Smaller motor shaft diameter is compensated by a bushing with a minimum thickness of 1 mm.

⚠ Motor mounting according to operating manual



SK⁺/SPK⁺ – The successor to our versatile hypoid gearhead with SP⁺ compatible output shaft, also available with planetary stage

SK+/SPK+

Details



SK+ 060 1/2-stage

					1-stage					2-stage									
Ratio [a]			*i*		**3**	**4**	**5**	**7**	**10**	**12**	**16**	**20**	**25**	**28**	**35**	**40**	**50**	**70**	**100**
Max. acceleration torque (max. 1000 cycles per hour)			T_{2B}	Nm	30	30	30	25	20	30	30	30	30	30	30	30	30	25	20
				in.lb	266	266	266	221	177	266	266	266	266	266	266	266	266	221	177
Nominal output torque (with n_{1N})			T_{2N}	Nm	22	22	22	20	15	22	22	22	22	22	22	22	22	20	15
				in.lb	195	195	195	177	133	195	195	195	195	195	195	195	195	177	133
Emergency stop torque (permitted 1000 times during the service life of the gearhead)			T_{2Not}	Nm	40	50	50	45	40	50	50	50	50	50	50	50	50	45	40
				in.lb	354	443	443	398	354	443	443	443	443	443	443	443	443	398	354
Nominal input speed (with T_{2N} and 20°C ambient temperature) [b), c)]			n_{1N}	rpm	2500	2700	3000	3000	3000	4400	4400	4400	4400	4400	4400	4400	4800	5500	5500
Max. continuous speed (with 20% T_{2N} and 20°C ambient temperature)			n_{1Ncym}	rpm	3000	3500	4000	3500	3500	For higher speeds, please contact us.									
Max. input speed			n_{1Max}	rpm	6000	6000	6000	6000	6000	6000	6000	6000	6000	6000	6000	6000	6000	6000	6000
Mean no load running torque (with n_1 = 3000 rpm and 20°C gearhead temperature) [d)]			T_{012}	Nm	1.2	1.1	1.0	1.2	1.1	0.2	0.2	0.2	0.2	0.2	0.2	0.1	0.1	0.1	0.1
				in.lb	10.6	9.7	8.9	10.6	9.7	1.8	1.8	1.8	1.8	1.8	1.8	0.9	0.9	0.9	0.9
Max. torsional backlash			j_t	arcmin	≤ 5														
Torsional rigidity			C_{t21}	Nm/ arcmin	2.0	2.1	2.2	2.0	1.8	2.1	2.1	2.1	2.1	2.1	2.1	2.1	2.2	2.0	1.8
				in.lb/ arcmin	18	19	19	18	16	19	19	19	19	19	19	19	19	18	16
Max. axial force [e)]			F_{2AMax}	N	2400														
				lb_f	540														
Max. radial force [e)]			F_{2RMax}	N	2700														
				lb_f	608														
Max. tilting moment			M_{2KMax}	Nm	251														
				in.lb	2220														
Efficiency at full load			η	%	96					94									
Service life (For calculation, see the Chapter "Information")			L_h	h	> 20000														
Weight incl. standard adapter plate			*m*	kg	2.9					3.2									
				lb_m	6.4					7.1									
Operating noise (with n_1 = 3000 rpm no load)			L_{PA}	dB(A)	≤ 64														
Max. permitted housing temperature				°C	+90														
				F	194														
Ambient temperature				°C	0 to +40														
				F	32 to 104														
Lubrication					Lubricated for life														
Paint					Blue RAL 5002														
Direction of rotation					Motor and gearhead opposite directions														
Protection class					IP 65														
Moment of inertia (relates to the drive) Clamping hub diameter [mm]	B	11	J_1	kgcm²	–	–	–	–	–	0.09	0.09	0.07	0.07	0.06	0.06	0.06	0.06	0.06	0.06
				10^{-3} in.lb.s²						0.08	0.08	0.07	0.06	0.06	0.06	0.05	0.05	0.05	0.05
	C	14	J_1	kgcm²	0.52	0.44	0.40	0.36	0.34	0.20	0.20	0.19	0.19	0.18	0.18	0.17	0.17	0.17	0.17
				10^{-3} in.lb.s²	0.46	0.39	0.35	0.32	0.30	0.18	0.18	0.17	0.16	0.16	0.16	0.15	0.15	0.15	0.15
	E	19	J_1	kgcm²	0.87	0.79	0.75	0.71	0.70	–	–	–	–	–	–	–	–	–	–
				10^{-3} in.lb.s²	0.77	0.70	0.66	0.63	0.62										

[a)] Other ratios available on request
[b)] Higher speeds are possible if the nominal torque is reduced
[c)] For higher ambient temperatures, please reduce input speed
[d)] Idling torques decrease during operation
[e)] Refers to center of the output shaft or flange

Please contact us for information on the best configuration for S1 conditions of use (continuous operation).

1-stage:

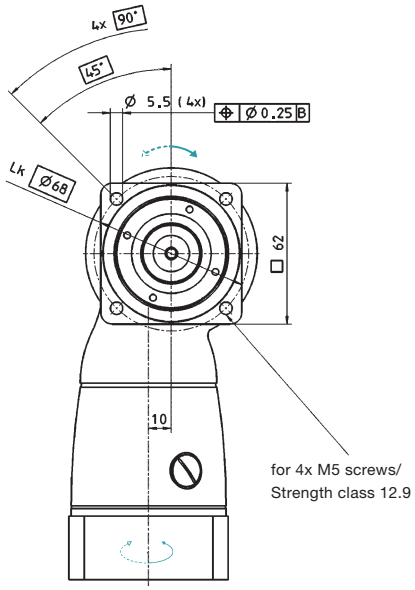

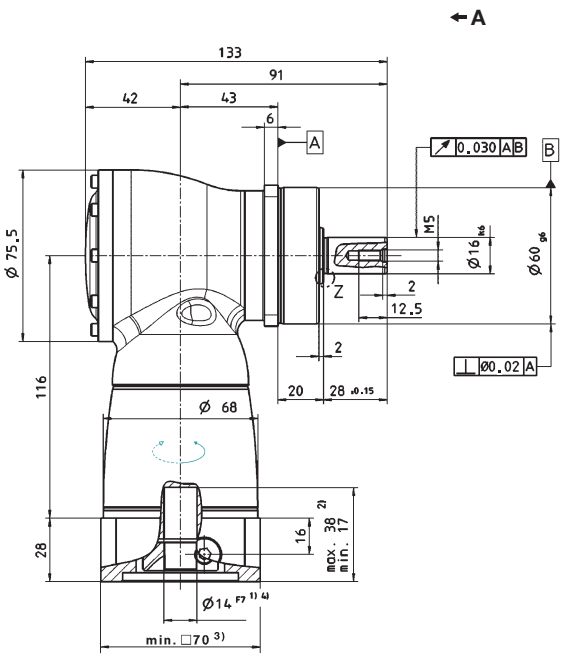

2-stage:

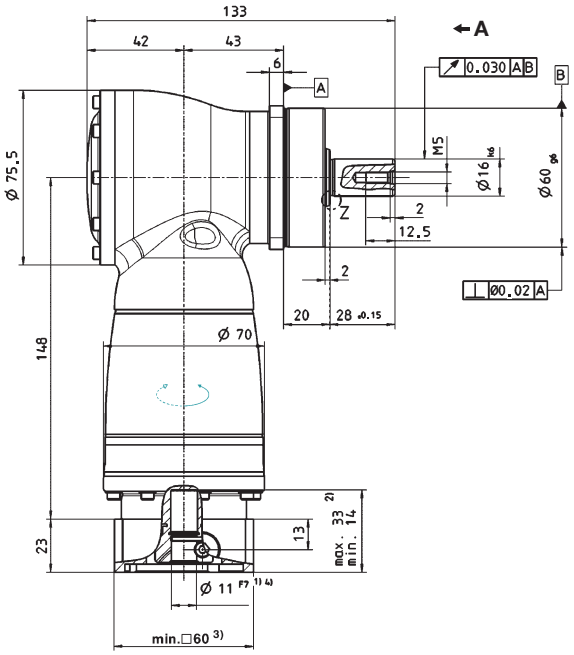

Z: Detail

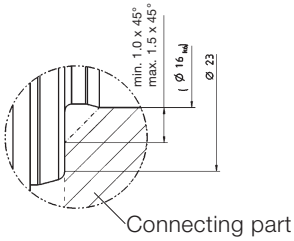

Alternatives: Output shaft variants

Keywayed output shaft in mm
E = key as per DIN 6885, sheet 1, form A

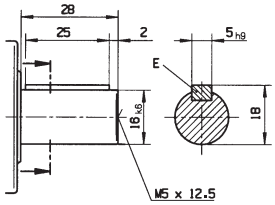

Involute gearing DIN 5480 available as an option.

See technical data sheet for available clamping hub diameters (mass moment of inertia). Dimensions available on request.

Non-tolerated dimensions ±1 mm

1) Check motor shaft fit.
2) Min./Max. permissible motor shaft length. Longer motor shafts are adaptable, please contact us.
3) The dimensions depend on the motor.
4) Smaller motor shaft diameter is compensated by a bushing with a minimum thickness of 1 mm.

⚠ Motor mounting according to operating manual

SK+ 075 1/2-stage

					1-stage					2-stage									
Ratio [a]			i		**3**	**4**	**5**	**7**	**10**	**12**	**16**	**20**	**25**	**28**	**35**	**40**	**50**	**70**	**100**
Max. acceleration torque (max. 1000 cycles per hour)			T_{2B}	Nm	70	70	70	60	50	70	70	70	70	70	70	70	70	60	50
				in.lb	620	620	620	531	443	620	620	620	620	620	620	620	620	531	443
Nominal output torque (with n_{1N})			T_{2N}	Nm	50	50	50	45	40	50	50	50	50	50	50	50	50	45	40
				in.lb	443	443	443	398	354	443	443	443	443	443	443	443	443	398	354
Emergency stop torque (permitted 1000 times during the service life of the gearhead)			T_{2Not}	Nm	95	115	115	110	100	115	115	115	115	115	115	115	115	110	100
				in.lb	841	1018	1018	974	885	1018	1018	1018	1018	1018	1018	1018	1018	974	885
Nominal input speed (with T_{2N} and 20°C ambient temperature) [b], [c]			n_{1N}	rpm	2300	2500	2800	2800	2800	3500	3500	3500	3500	3500	3500	3500	3800	4500	4500
Max. continuous speed (with 20% T_{2N} and 20°C ambient temperature)			n_{1Ncym}	rpm	3000	3500	4000	3500	3500	For higher speeds, please contact us.									
Max. input speed			n_{1Max}	rpm	6000	6000	6000	6000	6000	6000	6000	6000	6000	6000	6000	6000	6000	6000	6000
Mean no load running torque (with n_1 = 3000 rpm and 20°C gearhead temperature) [d]			T_{012}	Nm	2.0	1.7	1.5	2.0	1.8	0.3	0.3	0.2	0.2	0.2	0.2	0.1	0.1	0.1	0.1
				in.lb	18	15	13	18	16	2.7	2.7	1.8	1.8	1.8	1.8	0.9	0.9	0.9	0.9
Max. torsional backlash			j_t	arcmin	≤ 4														
Torsional rigidity			C_{t21}	Nm/ arcmin	5.0	5.5	6.0	6.0	6.0	5.5	5.5	5.5	5.5	5.5	5.5	5.5	6.0	6.0	6.0
				in.lb/ arcmin	44	49	53	53	53	49	49	49	49	49	49	49	53	53	53
Max. axial force [e]			F_{2AMax}	N	3400														
				lb_f	765														
Max. radial force [e]			F_{2RMax}	N	4000														
				lb_f	900														
Max. tilting moment			M_{2KMax}	Nm	437														
				in.lb	3867														
Efficiency at full load			η	%	96					94									
Service life (For calculation, see the Chapter "Information")			L_h	h	> 20000														
Weight incl. standard adapter plate			m	kg	4.8					5.4									
				lb_m	10.6					11.9									
Operating noise (with n_1 = 3000 rpm no load)			L_{PA}	dB(A)	≤ 66														
Max. permitted housing temperature				°C	+90														
				F	194														
Ambient temperature				°C	0 to +40														
				F	32 to 104														
Lubrication					Lubricated for life														
Paint					Blue RAL 5002														
Direction of rotation					Motor and gearhead opposite directions														
Protection class					IP 65														
Moment of inertia (relates to the drive) Clamping hub diameter [mm]	C	14	J_1	kgcm²	–	–	–	–	–	0.28	0.27	0.23	0.23	0.20	0.20	0.18	0.18	0.18	0.18
				10^{-3} in.lb.s²						0.25	0.24	0.21	0.20	0.18	0.18	0.16	0.16	0.16	0.16
	E	19	J_1	kgcm²	1.46	1.19	1.06	0.95	0.90	0.73	0.71	0.68	0.67	0.63	0.62	0.63	0.63	0.63	0.63
				10^{-3} in.lb.s²	1.29	1.05	0.94	0.84	0.79	0.64	0.63	0.60	0.59	0.55	0.55	0.56	0.55	0.55	0.55
	H	28	J_1	kgcm²	2.88	2.61	2.47	2.37	2.31	–	–	–	–	–	–	–	–	–	–
				10^{-3} in.lb.s²	2.55	2.31	2.19	2.10	2.04										

[a] Other ratios available on request
[b] Higher speeds are possible if the nominal torque is reduced
[c] For higher ambient temperatures, please reduce input speed
[d] Idling torques decrease during operation
[e] Refers to center of the output shaft or flange

Please contact us for information on the best configuration for S1 conditions of use (continuous operation).

1-stage:

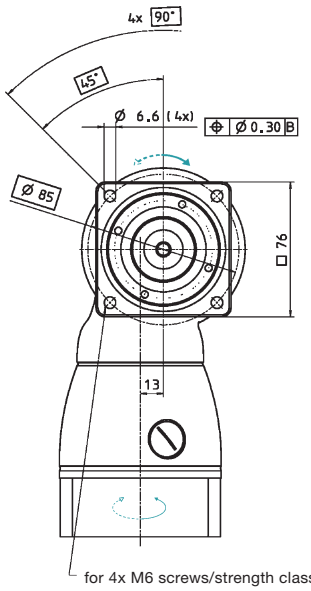

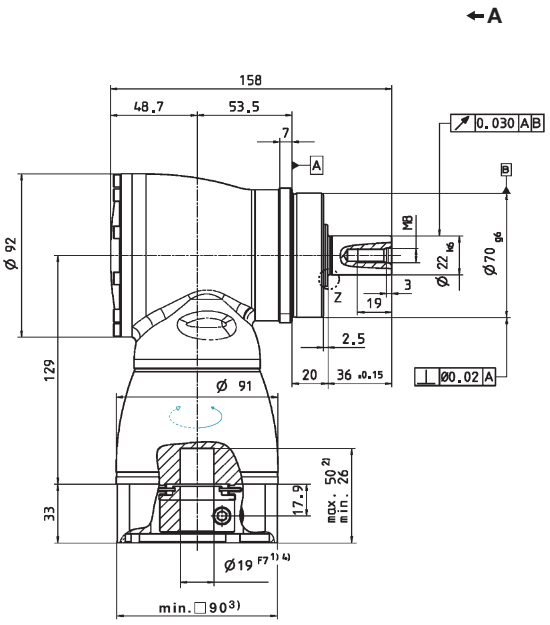

2-stage:

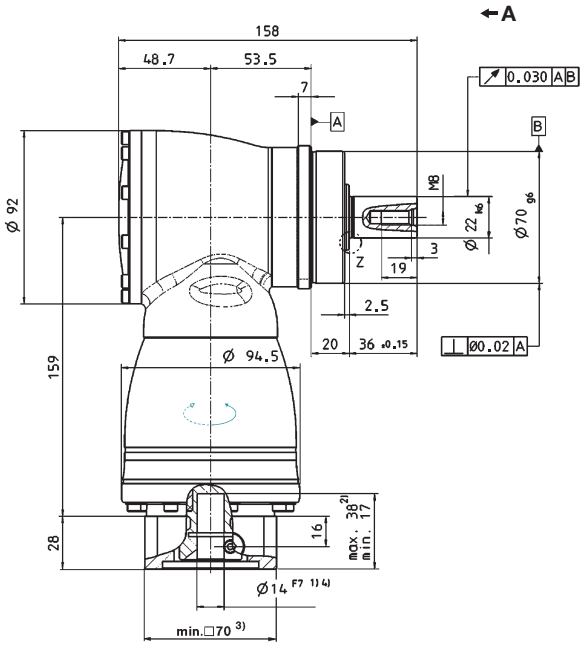

Z: Detail

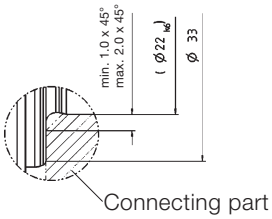

Alternatives: Output shaft variants

Keywayed output shaft in mm
E = key as per DIN 6885, sheet 1, form A

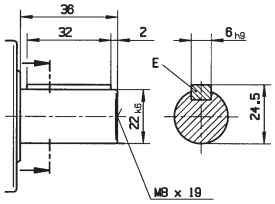

Involute gearing DIN 5480 available as an option.

See technical data sheet for available clamping hub diameters (mass moment of inertia). Dimensions available on request.

Non-tolerated dimensions ±1 mm

1) Check motor shaft fit.
2) Min./Max. permissible motor shaft length. Longer motor shafts are adaptable, please contact us.
3) The dimensions depend on the motor.
4) Smaller motor shaft diameter is compensated by a bushing with a minimum thickness of 1 mm.

⚠ Motor mounting according to operating manual

					1-stage					2-stage									
Ratio [a]			*i*		**3**	**4**	**5**	**7**	**10**	**12**	**16**	**20**	**25**	**28**	**35**	**40**	**50**	**70**	**100**
Max. acceleration torque (max. 1000 cycles per hour)			T_{2B}	Nm	170	170	170	145	125	170	170	170	170	170	170	170	170	145	125
				in.lb	1505	1505	1505	1283	1106	1505	1505	1505	1505	1505	1505	1505	1505	1283	1106
Nominal output torque (with n_{1N})			T_{2N}	Nm	100	100	100	90	80	100	100	100	100	100	100	100	100	90	80
				in.lb	885	885	885	797	708	885	885	885	885	885	885	885	885	797	708
Emergency stop torque (permitted 1000 times during the service life of the gearhead)			T_{2Not}	Nm	220	260	260	255	250	260	260	260	260	260	260	260	260	255	250
				in.lb	1947	2301	2301	2257	2213	2301	2301	2301	2301	2301	2301	2301	2301	2257	2213
Nominal input speed (with T_{2N} and 20°C ambient temperature) [b], [c]			n_{1N}	rpm	2200	2400	2700	2500	2500	3100	3100	3100	3100	3100	3100	3100	3500	4200	4200
Max. continuous speed (with 20% T_{2N} and 20°C ambient temperature)			n_{1Ncym}	rpm	3000	3400	3800	3400	3400	For higher speeds, please contact us.									
Max. input speed			n_{1Max}	rpm	4500	4500	4500	4500	4500	4500	4500	4500	4500	4500	4500	4500	4500	4500	4500
Mean no load running torque (with n_1 = 3000 rpm and 20°C gearhead temperature) [d]			T_{012}	Nm	3.8	3.0	2.3	3.5	2.8	0.6	0.6	0.5	0.4	0.4	0.3	0.2	0.2	0.2	0.2
				in.lb	34	27	20	31	25	5.3	5.3	4.4	3.5	3.5	2.7	1.8	1.8	1.8	1.8
Max. torsional backlash			j_t	arcmin	≤ 4														
Torsional rigidity			C_{t21}	Nm/ arcmin	10	11	13	13	13	11	11	11	11	11	11	11	13	13	13
				in.lb/ arcmin	89	97	115	115	115	97	97	97	97	97	97	97	115	115	115
Max. axial force [e]			F_{2AMax}	N	5700														
				lb_f	1283														
Max. radial force [e]			F_{2RMax}	N	6300														
				lb_f	1418														
Max. tilting moment			M_{2KMax}	Nm	833														
				in.lb	7370														
Efficiency at full load			η	%	96					94									
Service life (For calculation, see the Chapter "Information")			L_h	h	> 20000														
Weight incl. standardadapter plate			*m*	kg	9.3					10.0									
				lb_m	21					22									
Operating noise (with n_1 = 3000 rpm no load)			L_{PA}	dB(A)	≤ 66														
Max. permitted housing temperature				°C	+90														
				F	194														
Ambient temperature				°C	0 to +40														
				F	32 to 104														
Lubrication					Lubricated for life														
Paint					Blue RAL 5002														
Direction of rotation					Motor and gearhead opposite directions														
Protection class					IP 65														
Moment of inertia (relates to the drive) Clamping hub diameter [mm]	E	19	J_1	kgcm²	–	–	–	–	–	1.02	0.97	0.86	0.84	0.75	0.74	0.69	0.69	0.68	0.68
				10^{-3} in.lb.s²						0.91	0.86	0.76	0.74	0.66	0.66	0.61	0.61	0.60	0.60
	G	24	J_1	kgcm²	–	–	–	–	–	2.59	2.54	2.42	2.40	2.31	2.30	2.26	2.25	2.25	2.25
				10^{-3} in.lb.s²						2.29	2.25	2.14	2.13	2.05	2.04	2.00	1.99	1.99	1.99
	H	28	J_1	kgcm²	4.64	3.80	3.34	2.98	2.79	–	–	–	–	–	–	–	–	–	–
				10^{-3} in.lb.s²	4.10	3.36	2.95	2.64	2.47										
	K	38	J_1	kgcm²	11.9	11.0	10.6	10.2	10.0	–	–	–	–	–	–	–	–	–	–
				10^{-3} in.lb.s²	10.5	9.77	9.37	9.05	8.89										

[a] Other ratios available on request
[b] Higher speeds are possible if the nominal torque is reduced
[c] For higher ambient temperatures, please reduce input speed
[d] Idling torques decrease during operation
[e] Refers to center of the output shaft or flange

Please contact us for information on the best configuration for S1 conditions of use (continuous operation).

1-stage:

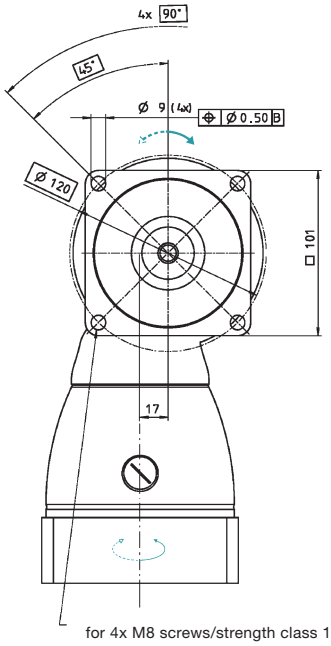

for 4x M8 screws/strength class 12.9

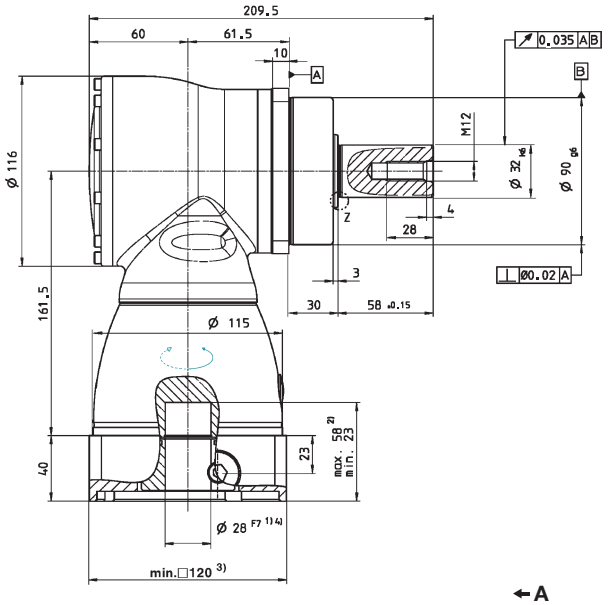

2-stage:

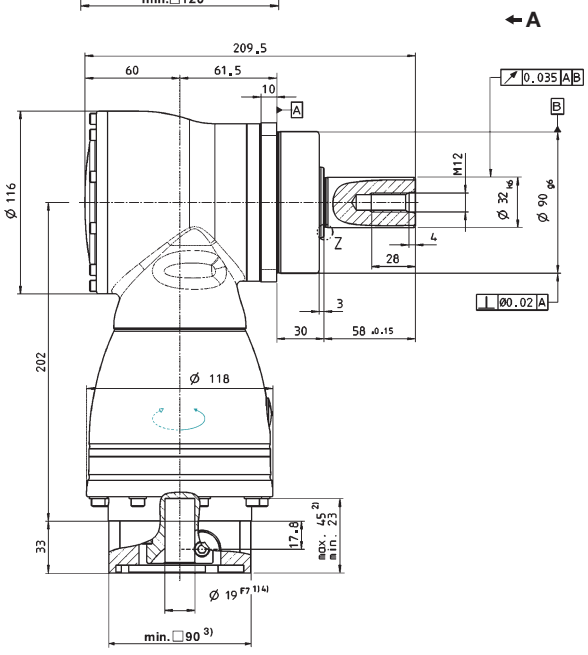

Z: Detail

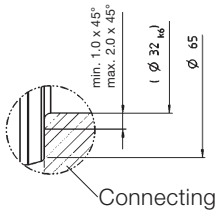

Connecting part

Alternatives: Output shaft variants

Keywayed output shaft in mm
E = key as per DIN 6885, sheet 1, form A

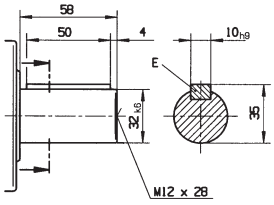

Involute gearing DIN 5480 available as an option.

See technical data sheet for available clamping hub diameters (mass moment of inertia). Dimensions available on request.

Non-tolerated dimensions ±1 mm

1) Check motor shaft fit.
2) Min./Max. permissible motor shaft length. Longer motor shafts are adaptable, please contact us.
3) The dimensions depend on the motor.
4) Smaller motor shaft diameter is compensated by a bushing with a minimum thickness of 1 mm.

⚠ Motor mounting according to operating manual

				1-stage					2-stage									
Ratio [a]			*i*	**3**	**4**	**5**	**7**	**10**	**12**	**16**	**20**	**25**	**28**	**35**	**40**	**50**	**70**	**100**
Max. acceleration torque (max. 1000 cycles per hour)			T_{2B} Nm	300	300	300	250	210	300	300	300	300	300	300	300	300	250	210
			in.lb	2655	2655	2655	2213	1859	2655	2655	2655	2655	2655	2655	2655	2655	2213	1859
Nominal output torque (with n_{1N})			T_{2N} Nm	190	190	190	175	160	190	190	190	190	190	190	190	190	175	160
			in.lb	1682	1682	1682	1549	1416	1682	1682	1682	1682	1682	1682	1682	1682	1549	1419
Emergency stop torque (permitted 1000 times during the service life of the gearhead)			T_{2Not} Nm	400	500	500	450	400	500	500	500	500	500	500	500	500	450	400
			in.lb	3540	4425	4425	3983	3540	4425	4425	4425	4425	4425	4425	4425	4425	3983	3540
Nominal input speed (with T_{2N} and 20°C ambient temperature) [b), c)]			n_{1N} rpm	1900	2000	2200	2000	2000	2900	2900	2900	2900	2900	2900	2900	3200	3200	3900
Max. continuous speed (with 20% T_{2N} and 20°C ambient temperature)			n_{1Ncym} rpm	2500	2800	3100	2800	2800	For higher speeds, please contact us.									
Max. input speed			n_{1Max} rpm	4500	4500	4500	4500	4500	4500	4500	4500	4500	4500	4500	4500	4500	4500	4500
Mean no load running torque (with n_1 = 3000 rpm and 20°C gearhead temperature) [d)]			T_{012} Nm	7.0	5.2	4.5	7.5	5.5	1.4	0.9	0.7	0.5	0.5	0.4	0.4	0.3	0.3	0.3
			in.lb	62	46	40	66	49	12.4	8	6.2	4.4	4.4	3.5	3.5	2.7	2.7	2.7
Max. torsional backlash			j_t arcmin	≤ 4														
Torsional rigidity			C_{t21} Nm/ arcmin	27	30	32	32	32	29	29	29	29	29	29	29	31	31	31
			in.lb/ arcmin	239	266	283	283	283	257	257	257	257	257	257	257	274	274	274
Max. axial force [e)]			F_{2AMax} N	9900														
			lb_f	2228														
Max. radial force [e)]			F_{2RMax} N	9500														
			lb_f	2138														
Max. tilting moment			M_{2KMax} Nm	1692														
			in.lb	14974														
Efficiency at full load			η %	96					94									
Service life (For calculation, see the Chapter "Information")			L_h h	> 20000														
Weight incl. standardadapter plate			*m* kg	22.6					25.0									
			lb_m	50					55									
Operating noise (with n_1 = 3000 rpm without load)			L_{PA} dB(A)	≤ 68														
Max. permitted housing temperature			°C	+90														
			F	194														
Ambient temperature			°C	0 to +40														
			F	32 to 104														
Lubrication				Lubricated for life														
Paint				Blue RAL 5002														
Direction of rotation				Motor and gearhead opposite directions														
Protection class				IP 65														
Moment of inertia (relates to the drive) Clamping hub diameter [mm]	G	24	J_1 kgcm²	–	–	–	–	–	4.21	3.85	3.28	3.17	2.78	2.73	2.48	2.46	2.43	2.42
			10^{-3} in.lb.s²						3.73	3.41	2.90	2.80	2.46	2.41	2.20	2.17	2.15	2.14
	K	38	J_1 kgcm²	25.0	19.1	16.3	14.1	12.8	11.1	10.7	10.2	10.1	9.69	9.64	9.39	9.37	9.34	9.33
			10^{-3} in.lb.s²	22.1	16.9	14.4	12.4	11.3	9.83	9.51	9.01	8.92	8.58	8.53	8.31	8.29	8.27	8.26

[a)] Other ratios available on request
[b)] Higher speeds are possible if the nominal torque is reduced
[c)] For higher ambient temperatures, please reduce input speed
[d)] Idling torques decrease during operation
[e)] Refers to center of the output shaft or flange

Please contact us for information on the best configuration for S1 conditions of use (continuous operation).

1-stage:

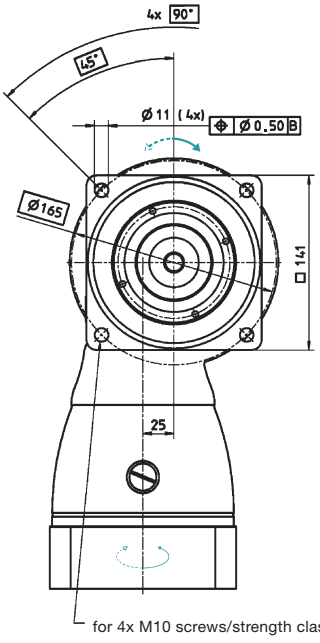

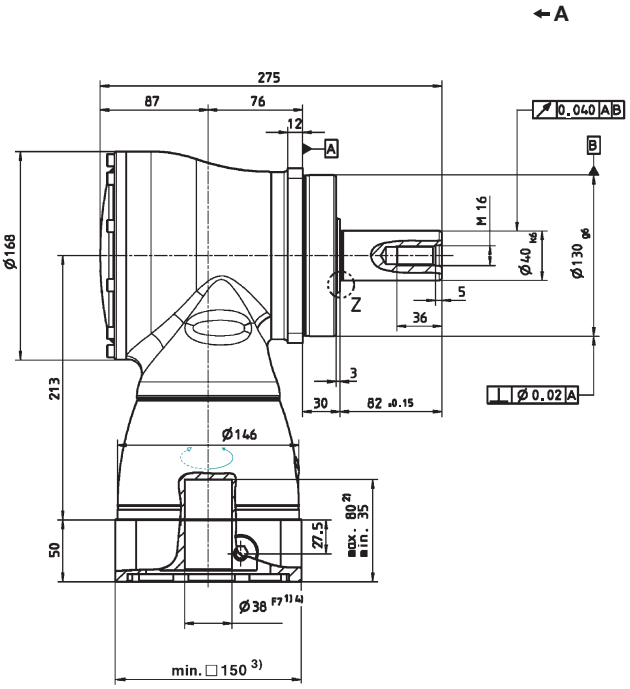

2-stage:

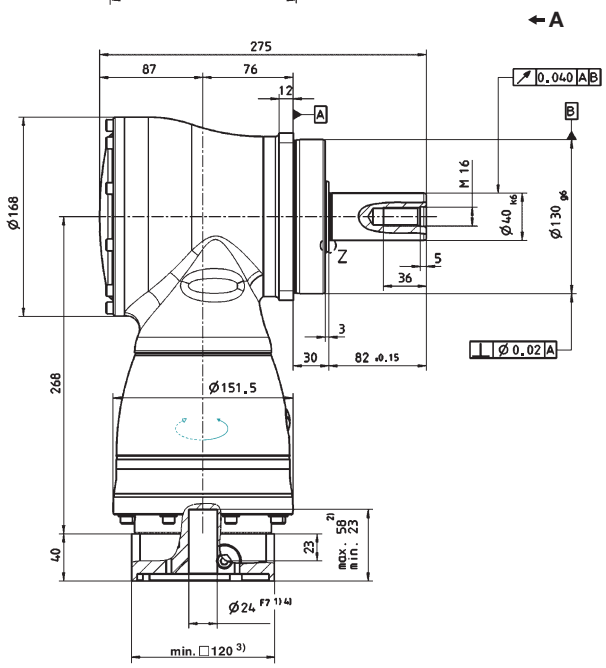

Z: Detail

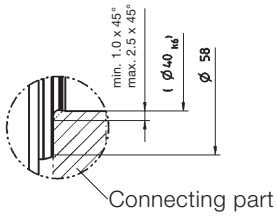

Alternatives: Output shaft variants

Keywayed output shaft in mm
E = key as per DIN 6885, sheet 1, form A

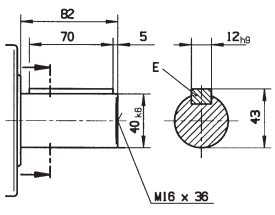

Involute gearing DIN 5480 available as an option.

See technical data sheet for available clamping hub diameters (mass moment of inertia). Dimensions available on request.

Non-tolerated dimensions ±1 mm

1) Check motor shaft fit.
2) Min./Max. permissible motor shaft length. Longer motor shafts are adaptable, please contact us.
3) The dimensions depend on the motor.
4) Smaller motor shaft diameter is compensated by a bushing with a minimum thickness of 1 mm.

⚠ Motor mounting according to operating manual

SK+ 180 1/2-stage

				1-stage					2-stage									
Ratio [a]			*i*	**3**	**4**	**5**	**7**	**10**	**12**	**16**	**20**	**25**	**28**	**35**	**40**	**50**	**70**	**100**
Max. acceleration torque (max. 1000 cycles per hour)			T_{2B} Nm	640	640	640	550	470	640	640	640	640	640	640	640	640	550	470
			in.lb	5664	5664	5664	4868	4160	5664	5664	5664	5664	5664	5664	5664	5664	4868	4160
Nominal output torque (with n_{1N})			T_{2N} Nm	400	400	400	380	360	400	400	400	400	400	400	400	400	380	360
			in.lb	3540	3540	3540	3363	3186	3540	3540	3540	3540	3540	3540	3540	3540	3363	3186
Emergency stop torque (permitted 1000 times during the service life of the gearhead)			T_{2Not} Nm	900	1050	1050	970	900	1050	1050	1050	1050	1050	1050	1050	1050	970	900
			in.lb	7965	9293	9293	8585	7965	9293	9293	9293	9293	9293	9293	9293	9293	8585	7965
Nominal input speed (with T_{2N} and 20°C ambient temperature) [b], [c]			n_{1N} rpm	1600	1800	2000	1800	1800	2700	2700	2700	2700	2700	2700	2700	2900	3200	3400
Max. continuous speed (with 20% T_{2N} and 20°C ambient temperature)			n_{1Ncym} rpm	2000	2400	2800	2500	2500	For higher speeds, please contact us.									
Max. input speed			n_{1Max} rpm	4000	4000	4000	4000	4000	4000	4000	4000	4000	4000	4000	4000	4000	4000	4000
Mean no load running torque (with n_1 = 3000 rpm and 20°C gearhead temperature) [d]			T_{012} Nm	14.5	12.0	10.0	15.0	12.5	3.0	2.3	1.8	1.6	1.3	1.2	0.9	0.9	0.9	0.9
			in.lb	128	106	89	133	111	26.6	20.4	15.9	14.2	11.5	10.6	8.0	8.0	8.0	8.0
Max. torsional backlash			j_t arcmin	≤ 4														
Torsional rigidity			C_{t21} Nm/ arcmin	64	71	79	78	77	71	71	71	71	71	71	71	78	78	78
			in.lb/ arcmin	566	628	699	690	681	628	628	628	628	628	628	628	690	690	690
Max. axial force [e]			F_{2AMax} N	14200														
			lb_f	3195														
Max. radial force [e]			F_{2RMax} N	14700														
			lb_f	3308														
Max. tilting moment			M_{2KMax} Nm	3213														
			in.lb	28435														
Efficiency at full load			η %	96					94									
Service life (For calculation, see the Chapter "Information")			L_h h	> 20000														
Weight incl. standardadapter plate			*m* kg	45.4					48									
			lb_m	100					106									
Operating noise (with n_1 = 3000 rpm no load)			L_{PA} dB(A)	≤ 68														
Max. permitted housing temperature			°C	+90														
			F	194														
Ambient temperature			°C	0 to +40														
			F	32 to 104														
Lubrication				Lubricated for life														
Paint				Blue RAL 5002														
Direction of rotation				Motor and gearhead opposite directions														
Protection class				IP 65														
Moment of inertia (relates to the drive)	K	38	J_1 kgcm²	–	–	–	–	–	15.3	14.0	12.3	12.0	10.9	10.7	10.1	10.0	9.95	9.91
			10^{-3} in.lb.s²						13.6	12.3	10.9	10.6	9.65	9.48	8.96	8.88	8.81	8.77
Clamping hub diameter [mm]	M	48	J_1 kgcm²	73.3	51.6	42.1	34.0	29.7	30.0	28.7	27.1	26.7	25.6	25.4	24.8	24.7	24.7	24.6
			10^{-3} in.lb.s²	64.9	45.6	37.3	30.1	26.3	26.6	25.4	23.9	23.6	22.7	22.5	22.0	21.9	21.8	21.8

[a] Other ratios available on request
[b] Higher speeds are possible if the nominal torque is reduced
[c] For higher ambient temperatures, please reduce input speed
[d] Idling torques decrease during operation
[e] Refers to center of the output shaft or flange

Please contact us for information on the best configuration for S1 conditions of use (continuous operation).

1-stage:

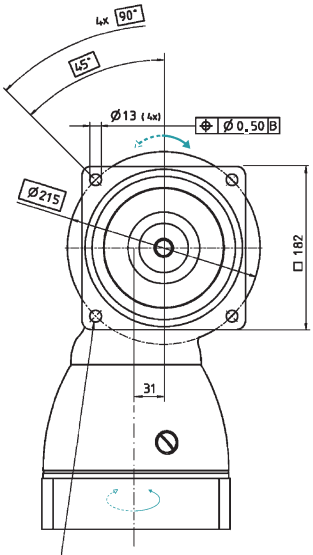

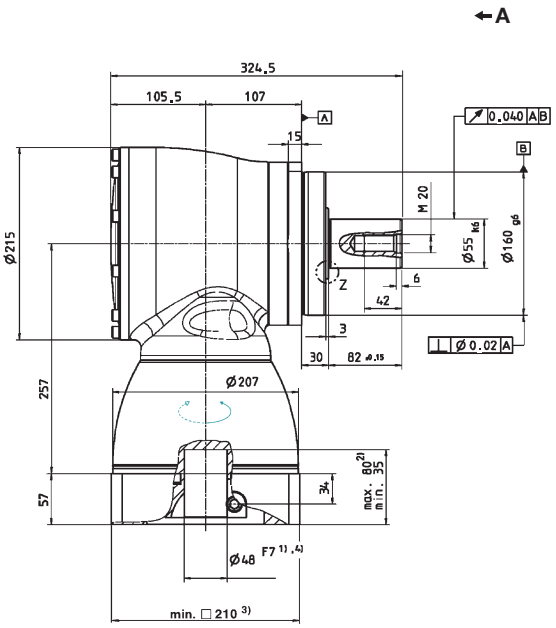

2-stage:

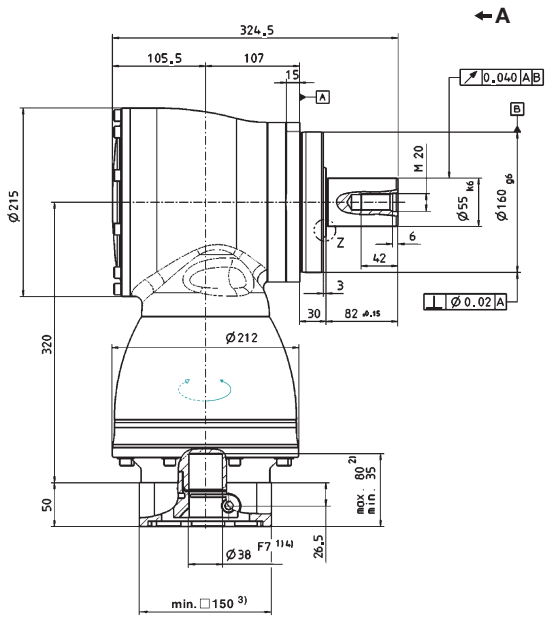

Z: Detail

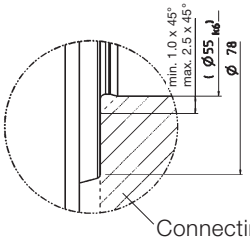

Alternatives: Output shaft variants

Keywayed output shaft in mm
E = key as per DIN 6885, sheet 1, form A

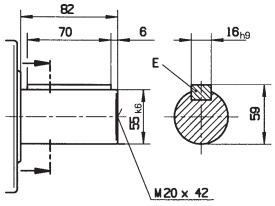

Involute gearing DIN 5480 available as an option.

See technical data sheet for available clamping hub diameters (mass moment of inertia). Dimensions available on request.

Non-tolerated dimensions ±1 mm

1) Check motor shaft fit.
2) Min./Max. permissible motor shaft length. Longer motor shafts are adaptable, please contact us.
3) The dimensions depend on the motor.
4) Smaller motor shaft diameter is compensated by a bushing with a minimum thickness of 1 mm.

⚠ Motor mounting according to operating manual

SPK+ 075 2-stage

				2-stage									
Ratio [a]			*i*	**12**	**16**	**20**	**25**	**28**	**35**	**40**	**50**	**70**	**100**
Max. acceleration torque (max. 1000 cycles per hour)			T_{2B} Nm	110	110	110	110	110	110	80	100	110	90
			T_{2B} in.lb	974	974	974	974	974	974	974	885	974	797
Nominal output torque (with n_{1N})			T_{2N} Nm	75	75	75	75	75	75	60	75	75	52
			T_{2N} in.lb	664	664	664	664	664	664	531	664	664	460
Emergency stop torque (permitted 1000 times during the service life of the gearhead)			T_{2Not} Nm	160	160	200	200	250	175	120	150	210	200
			T_{2Not} in.lb	1416	1416	1770	1770	2213	1549	1062	1328	1859	1770
Nominal input speed (with T_{2N} and 20°C ambient temperature) [b), c)]			n_{1N} rpm	2000	2400	2400	2700	2400	2500	2500	2500	2500	2500
Max. continuous speed (with 20% T_{2N} and 20°C ambient temperature)			n_{1Ncym} rpm	3000	3400	3400	3800	3400	3200	3200	3200	3200	3200
Max. input speed			n_{1Max} rpm	6000	6000	6000	6000	6000	6000	6000	6000	6000	6000
Mean no load running torque (with n_1=3000 rpm and 20°C gearhead temperature) [d)]			T_{012} Nm	1.5	1.3	1.2	1.2	1.2	1.3	1.3	1.3	1.3	1.3
			T_{012} in.lb	13.3	11.5	10.6	10.6	10.6	11.5	11.5	11.5	11.5	11.5
Max. torsional backlash			j_t arcmin	Standard ≤ 6 / Reduced ≤ 4									
Torsional rigidity			C_{t21} Nm/ arcmin	10									
			C_{t21} in.lb/ arcmin	89									
Max. axial force [e)]			F_{2AMax} N	3350									
			F_{2AMax} lb_f	753									
Max. radial force [e)]			F_{2RMax} N	4000									
			F_{2RMax} lb_f	900									
Max. tilting moment			M_{2KMax} Nm	236									
			M_{2KMax} in.lb	2089									
Efficiency at full load			η %	94									
Service life (For calculation, see the Chapter "Information")			L_h h	> 20000									
Weight incl. standard adapter plate			*m* kg	5.2									
			m lb_m	11.5									
Operating noise (with n_1=3000 rpm no load)			L_{PA} dB(A)	≤ 66									
Max. permitted housing temperature			°C	+90									
			F	194									
Ambient temperature			°C	0 to +40									
			F	32 to 104									
Lubrication				Lubricated for life									
Paint				Blue RAL 5002									
Direction of rotation				Motor and gearhead opposite directions									
Protection class				IP 65									
Moment of inertia (relates to the drive) Clamping hub diameter [mm]	C	14	J_1 kgcm²	0.54	0.45	0.44	0.40	0.44	0.36	0.35	0.34	0.34	0.34
			J_1 10^{-3} in.lb.s²	0.48	0.40	0.39	0.35	0.39	0.32	0.31	0.30	0.30	0.30
	E	19	J_1 kgcm²	0.89	0.80	0.79	0.75	0.79	0.71	0.70	0.70	0.70	0.69
			J_1 10^{-3} in.lb.s²	0.79	0.71	0.70	0.66	0.70	0.63	0.62	0.62	0.62	0.61

[a)] Other ratios up to i=1000 available on request
[b)] Higher speeds are possible if the nominal torque is reduced
[c)] For higher ambient temperatures, please reduce input speed
[d)] Idling torques decrease during operation
[e)] Refers to center of the output shaft or flange

Please contact us for information on the best configuration for S1 conditions of use (continuous operation).

2-stage:

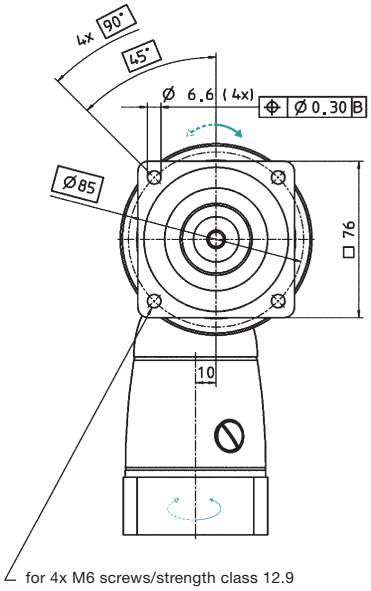

←A

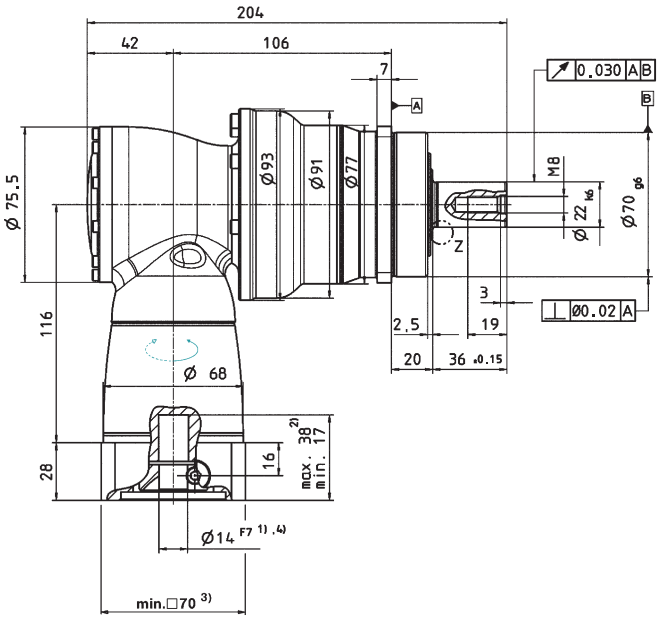

Z: Detail

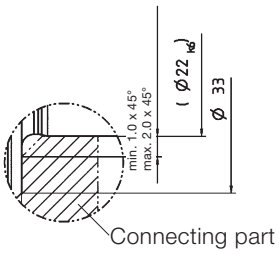

Alternatives: Output shaft variants

Keywayed output shaft in mm
E = key as per DIN 6885, sheet 1, form A

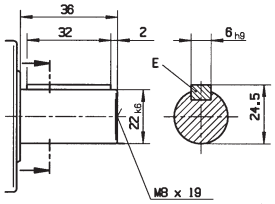

Involute gearing DIN 5480 in mm
X = W 22 x 1.25 x 30 x 16 x 6m, DIN 5480

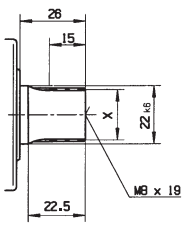

See technical data sheet for available clamping hub diameters (mass moment of inertia). Dimensions available on request.

Non-tolerated dimensions ±1 mm

1) Check motor shaft fit.
2) Min./Max. permissible motor shaft length. Longer motor shafts are adaptable, please contact us.
3) The dimensions depend on the motor.
4) Smaller motor shaft diameter is compensated by a bushing with a minimum thickness of 1 mm.

⚠ Motor mounting according to operating manual

				2-stage									
Ratio [a]			*i*	**12**	**16**	**20**	**25**	**28**	**35**	**40**	**50**	**70**	**100**
Max. acceleration torque (max. 1000 cycles per hour)			T_{2B} Nm	280	280	300	300	300	300	200	250	300	225
			T_{2B} in.lb	2478	2478	2655	2655	2655	2655	1770	2213	2655	1991
Nominal output torque (with n_{1N})			T_{2N} Nm	180	180	175	175	170	175	160	175	170	120
			T_{2N} in.lb	1593	1593	1549	1549	1505	1549	1416	1549	1505	1062
Emergency stop torque (permitted 1000 times during the service life of the gearhead)			T_{2Not} Nm	400	400	500	500	625	500	400	500	625	500
			T_{2Not} in.lb	3540	3540	4425	4425	5531	4425	3540	4425	5531	4425
Nominal input speed (with T_{2N} and 20°C ambient temperature) [b), c)]			n_{1N} rpm	2000	2400	2400	2700	2400	2500	2500	2500	2500	2500
Max. continuous speed (with 20% T_{2N} and 20°C ambient temperature)			n_{1Ncym} rpm	3000	3400	3400	3800	3400	3200	3200	3200	3200	3200
Max. input speed			n_{1Max} rpm	6000	6000	6000	6000	6000	6000	6000	6000	6000	6000
Mean no load running torque (with n_1=3000 rpm and 20°C gearhead temperature) [d)]			T_{012} Nm	2.5	2.1	2.0	1.8	2.0	2.2	2.0	2.0	2.0	2.0
			T_{012} in.lb	22.1	18.6	17.7	15.9	17.7	19.5	17.7	17.7	17.7	17.7
Max. torsional backlash			j_t arcmin	Standard ≤ 4 / Reduced ≤ 2									
Torsional rigidity			C_{t21} Nm/ arcmin	31									
			C_{t21} in.lb/ arcmin	274									
Max. axial force [e)]			F_{2AMax} N	5650									
			F_{2AMax} lb_f	1271									
Max. radial force [e)]			F_{2RMax} N	6300									
			F_{2RMax} lb_f	1418									
Max. tilting moment			M_{2KMax} Nm	487									
			M_{2KMax} in.lb	4310									
Efficiency at full load			η %	94									
Service life (For calculation, see the Chapter "Information")			L_h h	> 20000									
Weight incl. standard adapter plate			*m* kg	9.7									
			m lb_m	21.4									
Operating noise (with n_1=3000 rpm no load)			L_{PA} dB(A)	≤ 68									
Max. permitted housing temperature			°C	+90									
			F	194									
Ambient temperature			°C	0 to +40									
			F	32 to 104									
Lubrication				Lubricated for life									
Paint				Blue RAL 5002									
Direction of rotation				Motor and gearhead opposite directions									
Protection class				IP 65									
Moment of inertia (relates to the drive) Clamping hub diameter [mm]	E	19	J_1 kgcm²	1.48	1.20	1.17	1.05	1.15	0.95	0.90	0.89	0.89	0.89
			J_1 10^{-3} in.lb.s²	1.31	1.06	1.04	0.93	1.02	0.84	0.79	0.79	0.79	0.78
	H	28	J_1 kgcm²	2.89	2.62	2.59	2.46	2.56	2.36	2.31	2.31	2.30	2.30
			J_1 10^{-3} in.lb.s²	2.56	2.31	2.29	2.18	2.27	2.09	2.05	2.04	2.04	2.04

[a)] Other ratios up to i=1000 available on request
[b)] Higher speeds are possible if the nominal torque is reduced
[c)] For higher ambient temperatures, please reduce input speed
[d)] Idling torques decrease during operation
[e)] Refers to center of the output shaft or flange

Please contact us for information on the best configuration for S1 conditions of use (continuous operation).

2-stage:

←A

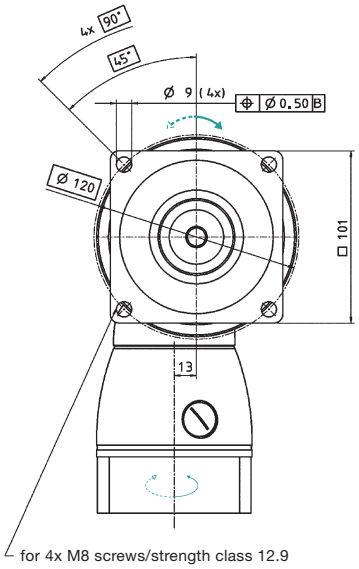

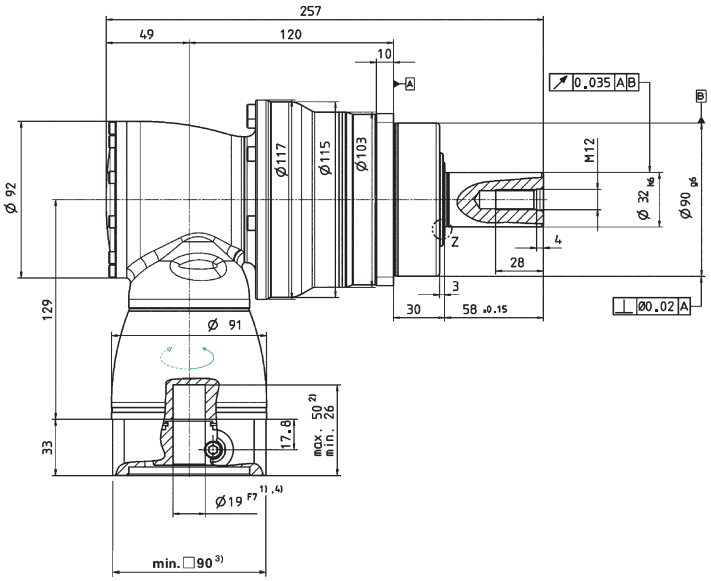

Z: Detail

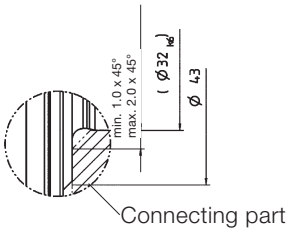

Alternatives: Output shaft variants

Keywayed output shaft in mm

E = key as per DIN 6885, sheet 1, form A

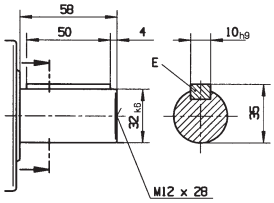

Involute gearing DIN 5480 in mm

X = W 32 x 1.25 x 30 x 24 x 6m, DIN 5480

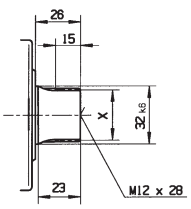

See technical data sheet for available clamping hub diameters (mass moment of inertia). Dimensions available on request.

Non-tolerated dimensions ±1 mm

1) Check motor shaft fit.
2) Min./Max. permissible motor shaft length. Longer motor shafts are adaptable, please contact us.
3) The dimensions depend on the motor.
4) Smaller motor shaft diameter is compensated by a bushing with a minimum thickness of 1 mm.

⚠ Motor mounting according to operating manual



				2-stage									
Ratio [a]			*i*	**12**	**16**	**20**	**25**	**28**	**35**	**40**	**50**	**70**	**100**
Max. acceleration torque (max. 1000 cycles per hour)			T_{2B} Nm	600	600	600	600	600	600	500	600	600	480
			in.lb	5310	5310	5310	5310	5310	5310	4425	5310	5310	4248
Nominal output torque (with n_{1N})			T_{2N} Nm	360	360	360	360	360	360	320	360	360	220
			in.lb	3186	3186	3186	3186	3186	3186	2832	3186	3186	1947
Emergency stop torque (permitted 1000 times during the service life of the gearhead)			T_{2Not} Nm	1000	1000	1250	1250	1250	1250	1000	1250	1250	1000
			in.lb	8850	8850	11063	11063	11063	11063	8850	11063	11063	8850
Nominal input speed (with T_{2N} and 20°C ambient temperature) [b], [c]			n_{1N} rpm	1900	2300	2300	2600	2300	2300	2300	2300	2300	2300
Max. continuous speed (with 20% T_{2N} and 20°C ambient temperature)			n_{1Ncym} rpm	2700	3100	3100	3500	3100	3000	3000	3000	3000	3000
Max. input speed			n_{1Max} rpm	4500	4500	4500	4500	4500	4500	4500	4500	4500	4500
Mean no load running torque (with n_1=3000 rpm and 20°C gearhead temperature) [d]			T_{012} Nm	4.0	3.7	3.6	2.8	3.5	3.9	3.1	3.1	3.1	3.1
			in.lb	35.4	32.7	31.9	24.8	31	34.5	27.4	27.4	27.4	27.4
Max. torsional backlash			j_t arcmin	Standard ≤ 4 / Reduced ≤ 2									
Torsional rigidity			C_{t21} Nm/ arcmin	53									
			in.lb/ arcmin	469									
Max. axial force [e]			F_{2AMax} N	9870									
			lb_f	2221									
Max. radial force [e]			F_{2RMax} N	9450									
			lb_f	2126									
Max. tilting moment			M_{2KMax} Nm	952									
			in.lb	8425									
Efficiency at full load			η %	94									
Service life (For calculation, see the Chapter "Information")			L_h h	> 20000									
Weight incl. standard adapter plate			*m* kg	20									
			lb_m	44									
Operating noise (with n_1=3000 rpm no load)			L_{PA} dB(A)	≤ 68									
Max. permitted housing temperature			°C	+90									
			F	194									
Ambient temperature			°C	0 to +40									
			F	32 to 104									
Lubrication				Lubricated for life									
Paint				Blue RAL 5002									
Direction of rotation				Motor and gearhead opposite directions									
Protection class				IP 65									
Moment of inertia (relates to the drive) Clamping hub diameter [mm]	H	28	J_1 kgcm²	4.68	3.82	3.75	3.31	3.68	2.97	2.80	2.79	2.78	2.77
			10^{-3} in.lb.s²	4.14	3.38	3.32	2.93	3.26	2.63	2.48	2.47	2.46	2.45
	K	38	J_1 kgcm²	11.8	11.0	10.9	10.5	10.9	10.1	9.96	9.95	9.94	9.94
			10^{-3} in.lb.s²	10.5	9.73	9.66	9.27	9.60	8.97	8.82	8.81	8.80	8.79

[a] Other ratios up to i=1000 available on request
[b] Higher speeds are possible if the nominal torque is reduced
[c] For higher ambient temperatures, please reduce input speed
[d] Idling torques decrease during operation
[e] Refers to center of the output shaft or flange

Please contact us for information on the best configuration for S1 conditions of use (continuous operation).

2-stage:

←A

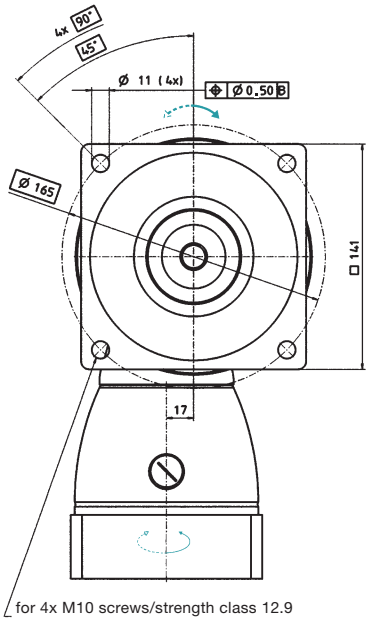

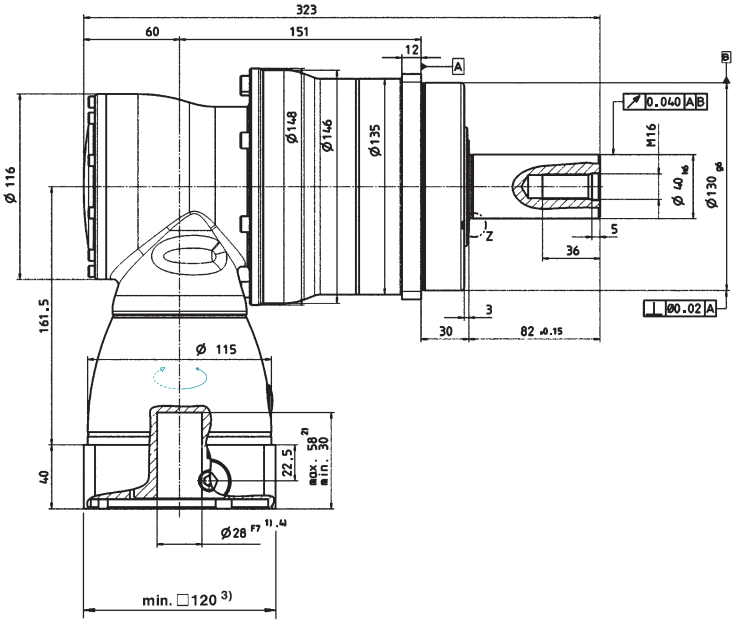

Z: Detail

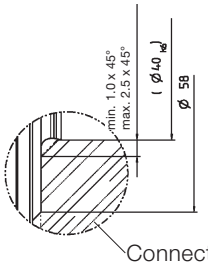

Alternatives: Output shaft variants

Keywayed output shaft in mm

E = key as per DIN 6885, sheet 1, form A

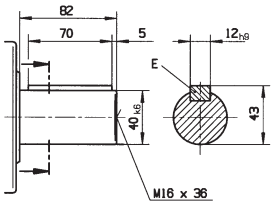

Involute gearing DIN 5480 in mm

X = W 40 x 2 x 30 x 18 x 6m, DIN 5480

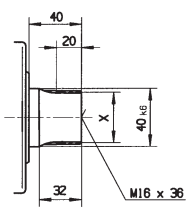

See technical data sheet for available clamping hub diameters (mass moment of inertia). Dimensions available on request.

Non-tolerated dimensions ±1 mm

1) Check motor shaft fit.
2) Min./Max. permissible motor shaft length. Longer motor shafts are adaptable, please contact us.
3) The dimensions depend on the motor.
4) Smaller motor shaft diameter is compensated by a bushing with a minimum thickness of 1 mm.

⚠ Motor mounting according to operating manual

SK+
SPK+

				2-stage									
Ratio [a]			*i*	**12**	**16**	**20**	**25**	**28**	**35**	**40**	**50**	**70**	**100**
Max. acceleration torque (max. 1000 cycles per hour)			T_{2B} Nm	1100	1100	1100	1100	1100	1100	840	1050	1100	880
			T_{2B} in.lb	9735	9735	9735	9735	9735	9735	7434	9293	9735	7788
Nominal output torque (with n_{1N})			T_{2N} Nm	750	750	750	750	750	750	640	750	750	750
			T_{2N} in.lb	6638	6638	6638	6638	6638	6638	5664	6638	6638	6638
Emergency stop torque (permitted 1000 times during the service life of the gearhead)			T_{2Not} Nm	1600	1600	2000	2000	2750	2000	1600	2000	2750	2200
			T_{2Not} in.lb	14160	14160	17700	17700	24338	17700	14160	17700	24338	19470
Nominal input speed (with T_{2N} and 20°C ambient temperature) [b), c)]			n_{1N} rpm	1600	1900	1900	2100	1900	2100	2100	2100	2100	2100
Max. continuous speed (with 20% T_{2N} and 20°C ambient temperature)			n_{1Ncym} rpm	2300	2600	2600	2800	2600	3000	3000	3000	3000	3000
Max. input speed			n_{1Max} rpm	4500	4500	4500	4500	4500	4500	4500	4500	4500	4500
Mean no load running torque (with n_1=3000 rpm and 20°C gearhead temperature) [d)]			T_{012} Nm	9.0	6.5	6.5	5.5	6.0	8.0	6.0	6.0	6.0	6.0
			T_{012} in.lb	79.7	57.5	57.5	48.7	53.1	70.8	53.1	53.1	53.1	53.1
Max. torsional backlash			j_t arcmin	Standard ≤ 4 / Reduced ≤ 2									
Torsional rigidity			C_{t21} Nm/ arcmin	175									
			C_{t21} in.lb/ arcmin	1549									
Max. axial force [e)]			F_{2AMax} N	14150									
			F_{2AMax} lb_f	3184									
Max. radial force [e)]			F_{2RMax} N	14700									
			F_{2RMax} lb_f	3308									
Max. tilting moment			M_{2KMax} Nm	1600									
			M_{2KMax} in.lb	14160									
Efficiency at full load			η %	94									
Service life (For calculation, see the Chapter "Information")			L_h h	> 20000									
Weight incl. standardadapter plate			*m* kg	45									
			m lb_m	99									
Operating noise (with n_1=3000 rpm no load)			L_{PA} dB(A)	≤ 70									
Max. permitted housing temperature			°C	+90									
			F	194									
Ambient temperature			°C	0 to +40									
			F	32 to 104									
Lubrication				Lubricated for life									
Paint				Blue RAL 5002									
Direction of rotation				Motor and gearhead opposite directions									
Protection class				IP 65									
Moment of inertia (relates to the drive) Clamping hub diameter [mm]	K	38	J_1 kgcm²	24.7	19.5	19.0	16.3	18.6	14.0	12.9	12.8	12.7	12.7
			J_1 10^{-3} in.lb.s²	21.9	17.2	16.8	14.4	16.5	12.4	11.4	11.3	11.3	11.2

[a)] Other ratios up to i=1000 available on request
[b)] Higher speeds are possible if the nominal torque is reduced
[c)] For higher ambient temperatures, please reduce input speed
[d)] Idling torques decrease during operation
[e)] Refers to center of the output shaft or flange

Please contact us for information on the best configuration for S1 conditions of use (continuous operation).

2-stage:

←A

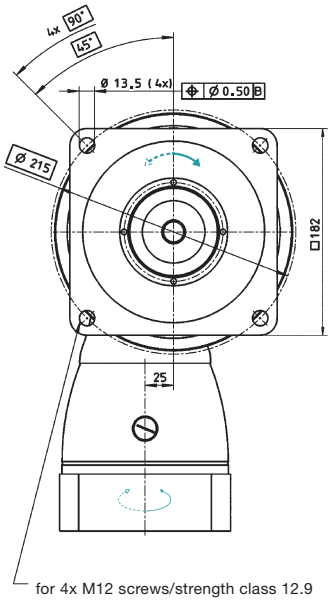

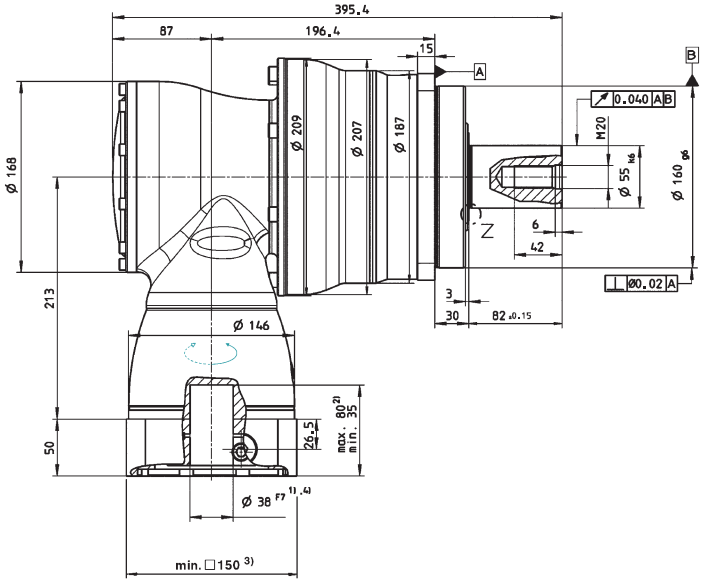

Z: Detail

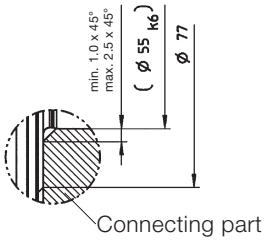

Alternatives: Output shaft variants

Keywayed output shaft in mm

E = key as per DIN 6885, sheet 1, form A

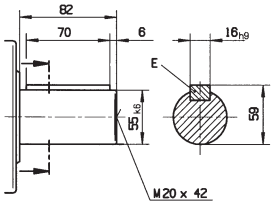

Involute gearing DIN 5480 in mm

X = W 55 x 2 x 30 x 26 x 6m, DIN 5480

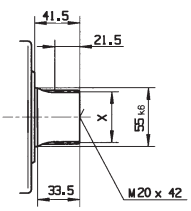

See technical data sheet for available clamping hub diameters (mass moment of inertia). Dimensions available on request.

Non-tolerated dimensions ±1 mm

1) Check motor shaft fit.
2) Min./Max. permissible motor shaft length. Longer motor shafts are adaptable, please contact us.
3) The dimensions depend on the motor.
4) Smaller motor shaft diameter is compensated by a bushing with a minimum thickness of 1 mm.

⚠ Motor mounting according to operating manual



HG⁺ – The successor to our versatile hypoid gearhead with hollow shaft



HG+ 060 1/2-stage

					1-stage					2-stage									
Ratio [a]			i		**3**	**4**	**5**	**7**	**10**	**12**	**16**	**20**	**25**	**28**	**35**	**40**	**50**	**70**	**100**
Max. acceleration torque (max. 1000 cycles per hour)			T_{2B}	Nm	30	30	30	25	20	30	30	30	30	30	30	30	30	25	20
				in.lb	266	266	266	221	177	266	266	266	266	266	266	266	266	221	177
Nominal output torque (with n_{1N})			T_{2N}	Nm	22	22	22	20	15	22	22	22	22	22	22	22	22	20	15
				in.lb	195	195	195	177	133	195	195	195	195	195	195	195	195	177	133
Emergency stop torque (permitted 1000 times during the service life of the gearhead)			T_{2Not}	Nm	40	50	50	45	40	50	50	50	50	50	50	50	50	45	40
				in.lb	354	443	443	398	354	443	443	443	443	443	443	443	443	398	354
Nominal input speed (with T_{2N} and 20°C ambient temperature) [b), c)]			n_{1N}	rpm	2500	2700	3000	3000	3000	4400	4400	4400	4400	4400	4400	4400	4800	5500	5500
Max. continuous speed (with 20% T_{2N} and 20°C ambient temperature)			n_{1Ncym}	rpm	3000	3500	4000	3500	3500	For higher speeds, please contact us.									
Max. input speed			n_{1Max}	rpm	6000	6000	6000	6000	6000	6000	6000	6000	6000	6000	6000	6000	6000	6000	6000
Mean no load running torque (with n_1 = 3000 rpm and 20°C gearhead temperature) [d)]			T_{012}	Nm	1.3	1.2	1.1	1.3	1.2	0.2	0.2	0.2	0.2	0.2	0.2	0.1	0.1	0.1	0.1
				in.lb	11.5	10.6	9.7	11.5	10.6	1.8	1.8	1.8	1.8	1.8	1.8	0.9	0.9	0.9	0.9
Max. torsional backlash			j_t	arcmin	≤ 5														
Torsional rigidity			C_{t21}	Nm/ arcmin	2.2	2.3	2.4	2.2	1.9	2.3	2.3	2.3	2.3	2.3	2.3	2.3	2.4	2.2	1.9
				in.lb/ arcmin	19	20	21	19	17	20	20	20	20	20	20	20	21	19	17
Max. axial force [e)]			F_{2AMax}	N	2400														
				lb_f	540														
Max. radial force [e)]			F_{2RMax}	N	2700														
				lb_f	608														
Max. tilting moment			M_{2KMax}	Nm	251														
				in.lb	2220														
Efficiency at full load			η	%	96					94									
Service life (For calculation, see the Chapter "Information")			L_h	h	> 20000														
Weight incl. standard adapter plate			m	kg	2.9					3.2									
				lb_m	6.4					7.1									
Operating noise (with n_1 = 3000 rpm no load)			L_{PA}	dB(A)	≤ 64														
Max. permitted housing temperature				°C	+90														
				F	194														
Ambient temperature				°C	0 to +40														
				F	32 to 104														
Lubrication					Lubricated for life														
Paint					Blue RAL 5002														
Direction of rotation					Motor and gearhead opposite directions														
Protection class					IP 65														
Moment of inertia (relates to the drive) Clamping hub diameter [mm]	B	11	J_1	kgcm²	–	–	–	–	–	0.09	0.09	0.07	0.07	0.06	0.06	0.06	0.06	0.06	0.06
				10^{-3} in.lb.s²						0.08	0.08	0.07	0.06	0.06	0.06	0.05	0.05	0.05	0.05
	C	14	J_1	kgcm²	0.52	0.44	0.40	0.36	0.34	0.20	0.20	0.19	0.19	0.18	0.18	0.17	0.17	0.17	0.17
				10^{-3} in.lb.s²	0.46	0.39	0.35	0.32	0.30	0.18	0.18	0.17	0.16	0.16	0.16	0.15	0.15	0.15	0.15
	E	19	J_1	kgcm²	0.87	0.79	0.75	0.71	0.70	–	–	–	–	–	–	–	–	–	–
				10^{-3} in.lb.s²	0.77	0.70	0.66	0.63	0.62										

[a)] Other ratios available on request
[b)] Higher speeds are possible if the nominal torque is reduced
[c)] For higher ambient temperatures, please reduce input speed
[d)] Idling torques decrease during operation
[e)] Refers to center of the output shaft or flange

Please contact us for information on the best configuration for S1 conditions of use (continuous operation).

1-stage:

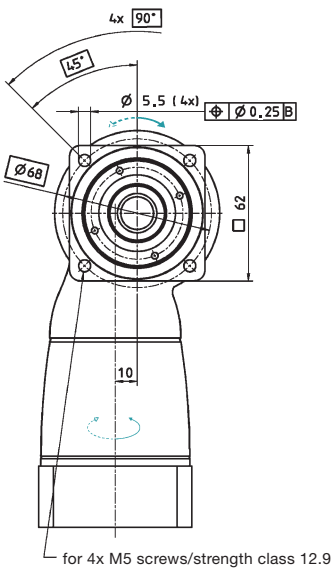

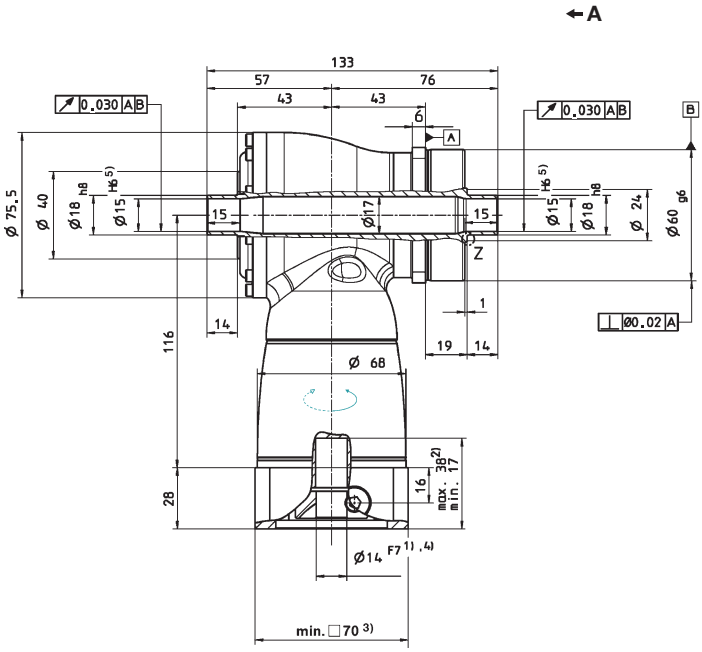

2-stage:

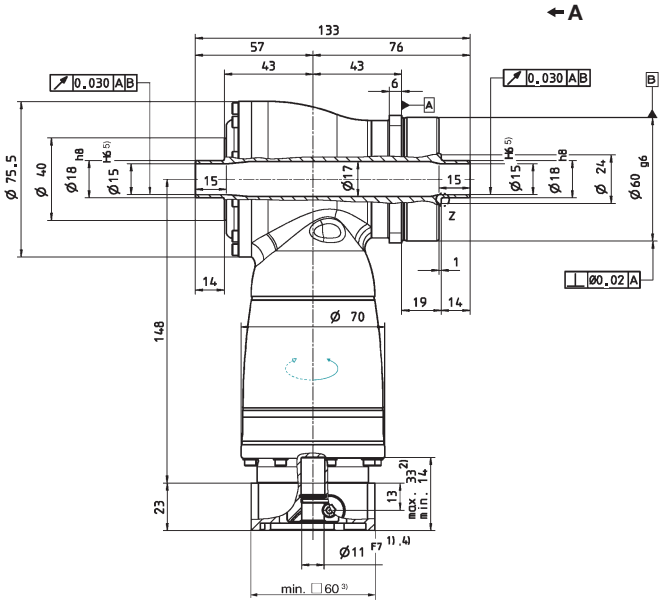

Z: Detail

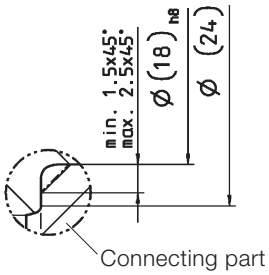

Alternatives: Single output shaft

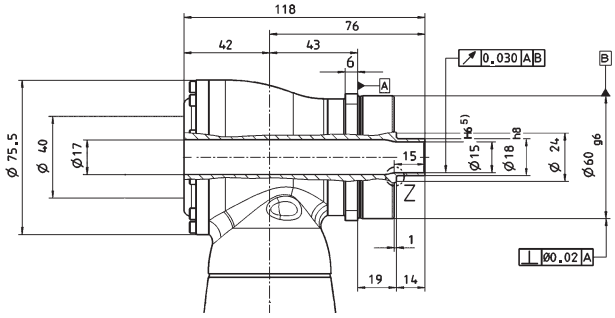

See technical data sheet for available clamping hub diameters (mass moment of inertia). Dimensions available on request.

Non-tolerated dimensions ±1 mm

1) Check motor shaft fit.
2) Min./Max. permissible motor shaft length. Longer motor shafts are adaptable, please contact us.
3) The dimensions depend on the motor.
4) Smaller motor shaft diameter is compensated by a bushing with a minimum thickness of 1 mm.
5) Tolerance h6 for mounted shaft.

⚠ Motor mounting according to operating manual

HG+ 075 1/2-stage

					1-stage					2-stage									
Ratio [a]			*i*		**3**	**4**	**5**	**7**	**10**	**12**	**16**	**20**	**25**	**28**	**35**	**40**	**50**	**70**	**100**
Max. acceleration torque (max. 1000 cycles per hour)			T_{2B}	Nm	70	70	70	60	50	70	70	70	70	70	70	70	70	60	50
				in.lb	620	620	620	531	443	620	620	620	620	620	620	620	620	531	443
Nominal output torque (with n_{1N})			T_{2N}	Nm	50	50	50	45	40	50	50	50	50	50	50	50	50	45	40
				in.lb	443	443	443	398	354	443	443	443	443	443	443	443	443	398	354
Emergency stop torque (permitted 1000 times during the service life of the gearhead)			T_{2Not}	Nm	95	115	115	110	100	115	115	115	115	115	115	115	115	110	100
				in.lb	841	1018	1018	974	885	1018	1018	1018	1018	1018	1018	1018	1018	974	885
Nominal input speed (with T_{2N} and 20°C ambient temperature) [b], [c]			n_{1N}	rpm	2300	2500	2800	2800	2800	3500	3500	3500	3500	3500	3500	3500	3800	4500	4500
Max. continuous speed (with 20?% T_{2N} and 20°C ambient temperature)			n_{1Ncym}	rpm	3000	3500	4000	3500	3500	For higher speeds, please contact us.									
Max. input speed			n_{1Max}	rpm	6000	6000	6000	6000	6000	6000	6000	6000	6000	6000	6000	6000	6000	6000	6000
Mean no load running torque (with n_1 = 3000 rpm and 20°C gearhead temperature) [d]			T_{012}	Nm	2.2	1.9	1.7	2.2	2.0	0.3	0.3	0.2	0.2	0.2	0.2	0.1	0.1	0.1	0.1
				in.lb	19	17	15	19	18	2.7	2.7	1.8	1.8	1.8	1.8	0.9	0.9	0.9	0.9
Max. torsional backlash			j_t	arcmin	≤ 4														
Torsional rigidity			C_{t21}	Nm/ arcmin	5.3	5.9	6.7	6.6	6.5	5.9	5.9	5.9	5.9	5.9	5.9	5.9	6.7	6.6	6.5
				in.lb/ arcmin	47	52	60	58	57	52	52	52	52	52	52	52	59	58	58
Max. axial force [e]			F_{2AMax}	N	3400														
				lb_f	765														
Max. radial force [e]			F_{2RMax}	N	4000														
				lb_f	900														
Max. tilting moment			M_{2KMax}	Nm	437														
				in.lb	3867														
Efficiency at full load			η	%	96					94									
Service life (For calculation, see the Chapter "Information")			L_h	h	> 20000														
Weight incl. standard adapter plate			*m*	kg	4.8					5.1									
				lb_m	10.6					11.3									
Operating noise (with n_1 = 3000 rpm no load)			L_{PA}	dB(A)	≤ 66														
Max. permitted housing temperature				°C	+90														
				F	194														
Ambient temperature				°C	0 to +40														
				F	32 to 104														
Lubrication					Lubricated for life														
Paint					Blue RAL 5002														
Direction of rotation					Motor and gearhead opposite directions														
Protection class					IP 65														
Moment of inertia (relates to the drive) Clamping hub diameter [mm]	C	14	J_1	$kgcm^2$	–	–	–	–	–	0.28	0.27	0.23	0.23	0.20	0.20	0.18	0.18	0.18	0.18
				10^{-3} in.lb.s²						0.25	0.24	0.21	0.20	0.18	0.18	0.16	0.16	0.16	0.16
	E	19	J_1	$kgcm^2$	1.46	1.19	1.06	0.95	0.90	0.73	0.71	0.68	0.67	0.63	0.62	0.63	0.63	0.63	0.63
				10^{-3} in.lb.s²	1.29	1.05	0.94	0.84	0.79	0.64	0.63	0.60	0.59	0.55	0.55	0.56	0.55	0.55	0.55
	H	28	J_1	$kgcm^2$	2.86	2.60	2.47	2.36	2.31	–	–	–	–	–	–	–	–	–	–
				10^{-3} in.lb.s²	2.53	2.30	2.19	2.09	2.04										

[a] Other ratios available on request
[b] Higher speeds are possible if the nominal torque is reduced
[c] For higher ambient temperatures, please reduce input speed
[d] Idling torques decrease during operation
[e] Refers to center of the output shaft or flange

Please contact us for information on the best configuration for S1 conditions of use (continuous operation).

View A

1-stage:

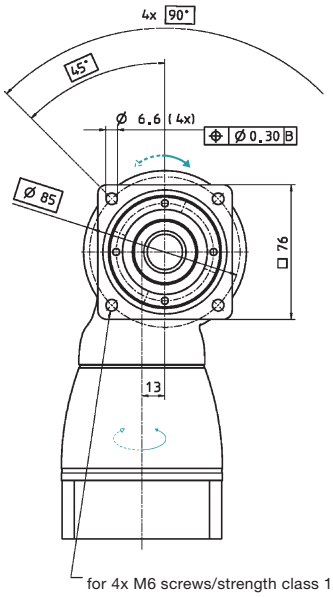

←A

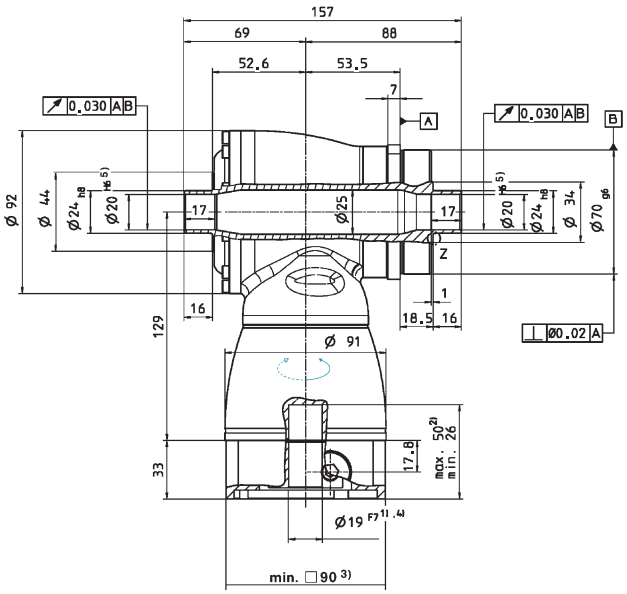

2-stage:

←A

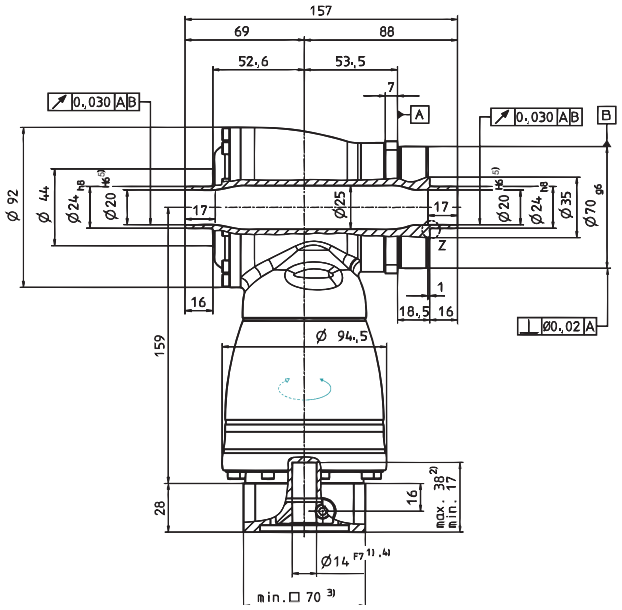

Z: Detail

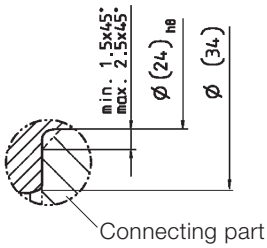

Alternatives: Single output shaft

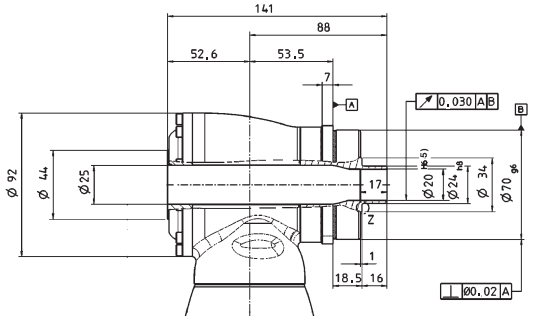

See technical data sheet for available clamping hub diameters (mass moment of inertia). Dimensions available on request.

Non-tolerated dimensions ±1 mm

1) Check motor shaft fit.
2) Min./Max. permissible motor shaft length. Longer motor shafts are adaptable, please contact us.
3) The dimensions depend on the motor.
4) Smaller motor shaft diameter is compensated by a bushing with a minimum thickness of 1 mm.
5) Tolerance h6 for mounted shaft.

⚠ Motor mounting according to operating manual

HG+

HG+ 100 1/2-stage

					1-stage					2-stage									
Ratio [a]			i		**3**	**4**	**5**	**7**	**10**	**12**	**16**	**20**	**25**	**28**	**35**	**40**	**50**	**70**	**100**
Max. acceleration torque (max. 1000 cycles per hour)			T_{2B}	Nm	170	170	170	145	125	170	170	170	170	170	170	170	170	145	125
				in.lb	1505	1505	1505	1283	1106	1505	1505	1505	1505	1505	1505	1505	1505	1283	1106
Nominal output torque (with n_{1N})			T_{2N}	Nm	100	100	100	90	80	100	100	100	100	100	100	100	100	90	80
				in.lb	885	885	885	797	708	885	885	885	885	885	885	885	885	797	708
Emergency stop torque (permitted 1000 times during the service life of the gearhead)			T_{2Not}	Nm	220	260	260	255	250	260	260	260	260	260	260	260	260	255	250
				in.lb	1947	2301	2301	2257	2213	2301	2301	2301	2301	2301	2301	2301	2301	2257	2213
Nominal input speed (with T_{2N} and 20°C ambient temperature) [b], [c]			n_{1N}	rpm	2200	2400	2700	2500	2500	3100	3100	3100	3100	3100	3100	3100	3500	4200	4200
Max. continuous speed (with 20% T_{2N} and 20°C ambient temperature)			n_{1Ncym}	rpm	3000	3400	3800	3400	3400	For higher speeds, please contact us.									
Max. input speed			n_{1Max}	rpm	4500	4500	4500	4500	4500	4500	4500	4500	4500	4500	4500	4500	4500	4500	4500
Mean no load running torque (with n_1 = 3000 rpm and 20°C gearhead temperature) [d]			T_{012}	Nm	4.2	3.3	2.5	3.9	3.1	0.7	0.7	0.6	0.4	0.4	0.3	0.2	0.2	0.2	0.2
				in.lb	37	29	22	35	27	6.2	6.2	5.3	3.5	3.5	2.7	1.8	1.8	1.8	1.8
Max. torsional backlash			j_t	arcmin	≤ 4														
Torsional rigidity			C_{t21}	Nm/ arcmin	10.7	12.1	14.0	14.2	14.4	12.1	12.1	12.1	12.1	12.1	12.1	12.1	14.0	14.2	14.4
				in.lb/ arcmin	95	107	124	126	127	107	107	107	107	107	107	107	124	126	127
Max. axial force [e]			F_{2AMax}	N	5700														
				lb_f	1283														
Max. radial force [e]			F_{2RMax}	N	6300														
				lb_f	1418														
Max. tilting moment			M_{2KMax}	Nm	833														
				in.lb	7370														
Efficiency at full load			η	%	96					94									
Service life (For calculation, see the Chapter "Information")			L_h	h	> 20000														
Weight incl. standard adapter plate			m	kg	9.3					9.5									
				lb_m	21					21									
Operating noise (with n_1 = 3000 rpm no load)			L_{PA}	dB(A)	≤ 66														
Max. permitted housing temperature				°C	+90														
				F	194														
Ambient temperature				°C	0 to +40														
				F	32 to 104														
Lubrication					Lubricated for life														
Paint					Blue RAL 5002														
Direction of rotation					Motor and gearhead opposite directions														
Protection class					IP 65														
Moment of inertia (relates to the drive) Clamping hub diameter [mm]	E	19	J_1	kgcm²	–	–	–	–	–	1.02	0.97	0.86	0.84	0.75	0.74	0.69	0.69	0.68	0.68
				10^{-3} in.lb.s²						0.91	0.86	0.76	0.74	0.66	0.66	0.61	0.61	0.60	0.60
	G	24	J_1	kgcm²	–	–	–	–	–	2.59	2.54	2.42	2.40	2.31	2.30	2.26	2.25	2.25	2.25
				10^{-3} in.lb.s²						2.29	2.25	2.14	2.13	2.05	2.04	2.00	1.99	1.99	1.99
	H	28	J_1	kgcm²	4.64	3.80	3.34	2.98	2.79	–	–	–	–	–	–	–	–	–	–
				10^{-3} in.lb.s²	4.10	3.36	2.95	2.64	2.47										
	K	38	J_1	kgcm²	11.8	11.0	10.6	10.2	10.0	–	–	–	–	–	–	–	–	–	–
				10^{-3} in.lb.s²	10.4	9.73	9.34	9.04	8.88										

[a] Other ratios available on request
[b] Higher speeds are possible if the nominal torque is reduced
[c] For higher ambient temperatures, please reduce input speed
[d] Idling torques decrease during operation
[e] Refers to center of the output shaft or flange

Please contact us for information on the best configuration for S1 conditions of use (continuous operation).

1-stage:

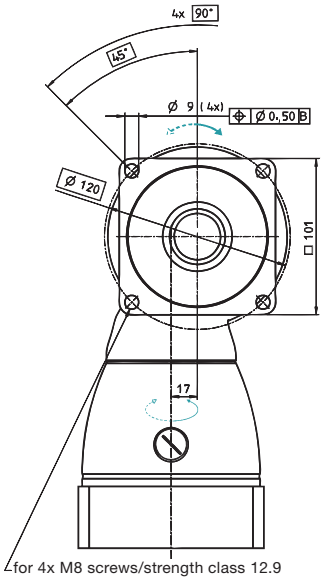

←A

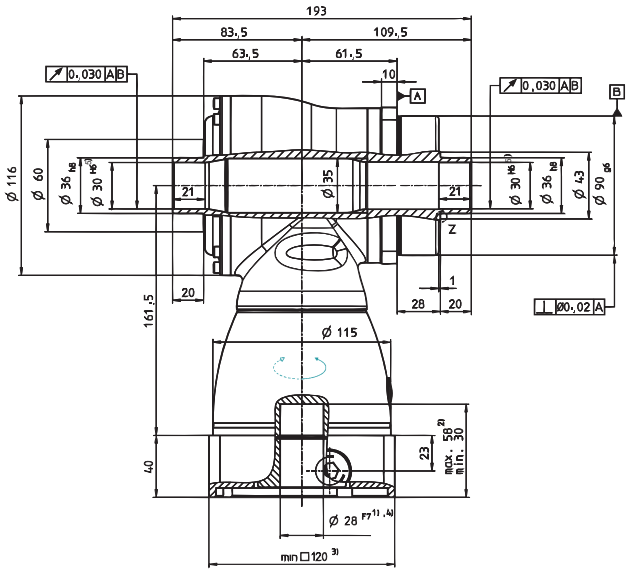

2-stage:

←A

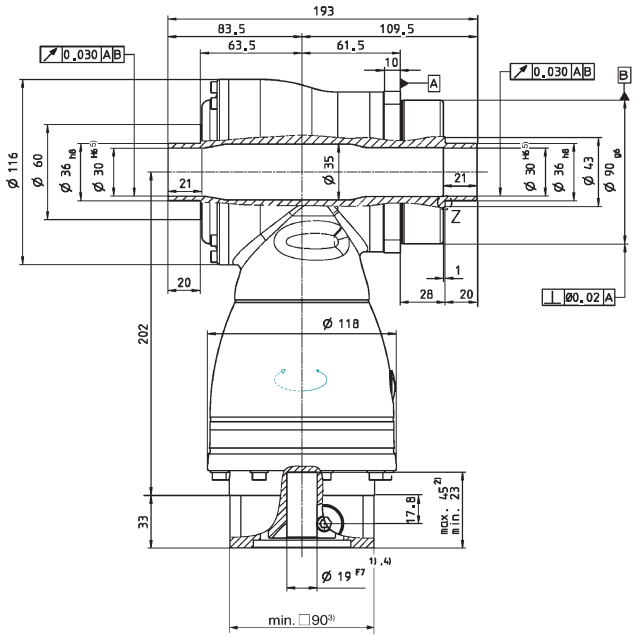

Z: Detail

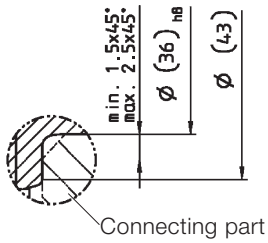

Alternatives: Single output shaft

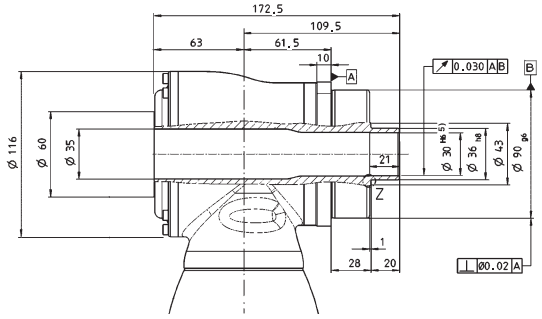

See technical data sheet for available clamping hub diameters (mass moment of inertia). Dimensions available on request.

Non-tolerated dimensions ±1 mm

1) Check motor shaft fit.
2) Min./Max. permissible motor shaft length. Longer motor shafts are adaptable, please contact us.
3) The dimensions depend on the motor.
4) Smaller motor shaft diameter is compensated by a bushing with a minimum thickness of 1 mm.
5) Tolerance h6 for mounted shaft.

⚠ Motor mounting according to operating manual

HG+ 140 1/2-stage

				1-stage					2-stage									
Ratio [a]			*i*	**3**	**4**	**5**	**7**	**10**	**12**	**16**	**20**	**25**	**28**	**35**	**40**	**50**	**70**	**100**
Max. acceleration torque (max. 1000 cycles per hour)			T_{2B} Nm	300	300	300	250	210	300	300	300	300	300	300	300	300	250	210
			in.lb	2655	2655	2655	2213	1859	2655	2655	2655	2655	2655	2655	2655	2655	2213	1859
Nominal output torque (with n_{1N})			T_{2N} Nm	190	190	190	175	160	190	190	190	190	190	190	190	190	175	160
			in.lb	1682	1682	1682	1549	1416	1682	1682	1682	1682	1682	1682	1682	1682	1549	1416
Emergency stop torque (permitted 1000 times during the service life of the gearhead)			T_{2Not} Nm	400	500	500	450	400	500	500	500	500	500	500	500	500	450	400
			in.lb	3540	4425	4425	3983	3540	4425	4425	4425	4425	4425	4425	4425	4425	3983	3540
Nominal input speed (with T_{2N} and 20°C ambient temperature) [b), c)]			n_{1N} rpm	1900	2000	2200	2000	2000	2900	2900	2900	2900	2900	2900	2900	3200	3200	3900
Max. continuous speed (with 20% T_{2N} and 20°C ambient temperature)			n_{1Ncym} rpm	2500	2800	3100	2800	2800	For higher speeds, please contact us.									
Max. input speed			n_{1Max} rpm	4500	4500	4500	4500	4500	4500	4500	4500	4500	4500	4500	4500	4500	4500	4500
Mean no load running torque (with n_1 = 3000 rpm and 20°C gearhead temperature) [d)]			T_{012} Nm	7.7	5.7	5.0	8.3	6.1	1.5	1.0	0.8	0.6	0.6	0.4	0.4	0.3	0.3	0.3
			in.lb	68	50	44	73	54	13.3	8.9	7.1	5.3	5.3	3.5	3.5	2.7	2.7	2.7
Max. torsional backlash			j_t arcmin	≤ 4														
Torsional rigidity			C_{t21} Nm/ arcmin	32	36	41	39	38	36	36	36	36	36	36	36	41	39	38
			in.lb/ arcmin	287	321	360	346	337	319	319	319	319	319	319	319	363	345	336
Max. axial force [e)]			F_{2AMax} N	9900														
			lb_f	2228														
Max. radial force [e)]			F_{2RMax} N	9500														
			lb_f	2138														
Max. tilting moment			M_{2KMax} Nm	1692														
			in.lb	14974														
Efficiency at full load			η %	96					94									
Service life (For calculation, see the Chapter "Information")			L_h h	> 20000														
Weight incl. standardadapter plate			*m* kg	22.6					24									
			lb_m	50					53									
Operating noise (with n_1 = 3000 rpm no load)			L_{PA} dB(A)	≤ 68														
Max. permitted housing temperature			°C	+90														
			F	194														
Ambient temperature			°C	0 to +40														
			F	32 to 104														
Lubrication				Lubricated for life														
Paint				Blue RAL 5002														
Direction of rotation				Motor and gearhead opposite directions														
Protection class				IP 65														
Moment of inertia (relates to the drive)	G	24	J_1 kgcm²	–	–	–	–	–	4.20	3.84	3.27	3.16	2.78	2.73	2.48	2.45	2.43	2.42
			10^{-3} in.lb.s²						3.71	3.40	2.90	2.80	2.46	2.41	2.20	2.17	2.15	2.14
Clamping hub diameter [mm]	K	38	J_1 kgcm²	25.0	19.1	16.3	14.1	12.8	11.1	10.7	10.2	10.1	9.69	9.64	9.39	9.37	9.34	9.33
			10^{-3} in.lb.s²	22.1	16.9	14.4	12.4	11.3	9.83	9.51	9.01	8.92	8.58	8.53	8.31	8.29	8.27	8.26

[a)] Other ratios available on request
[b)] Higher speeds are possible if the nominal torque is reduced
[c)] For higher ambient temperatures, please reduce input speed
[d)] Idling torques decrease during operation
[e)] Refers to center of the output shaft or flange

Please contact us for information on the best configuration for S1 conditions of use (continuous operation).

1-stage:

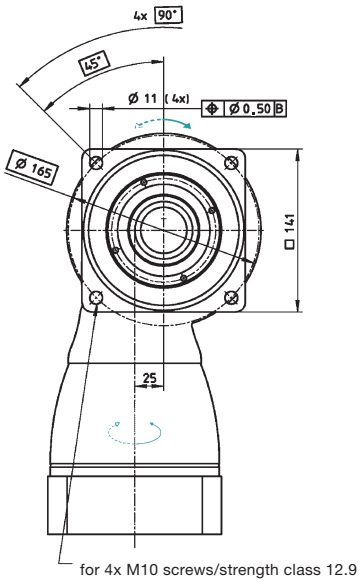

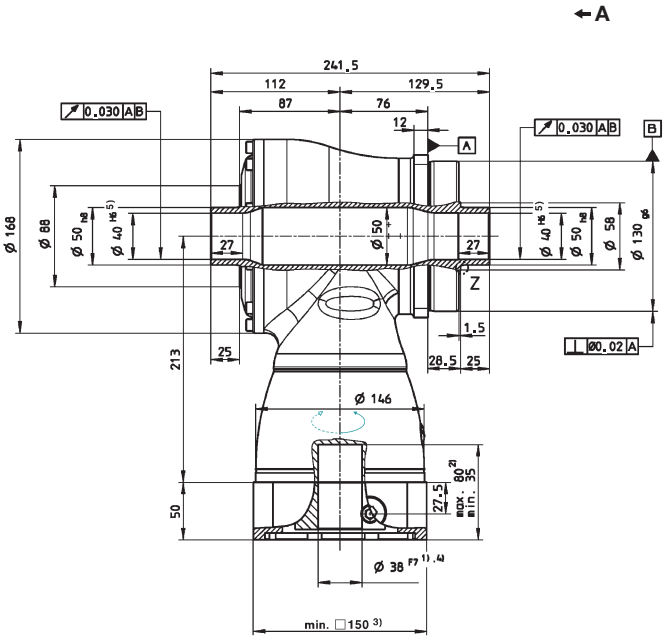

2-stage:

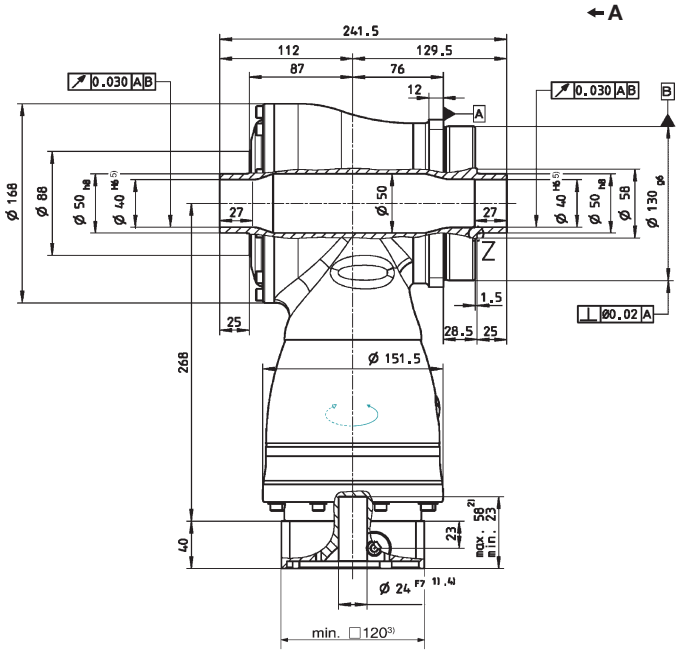

Z: Detail

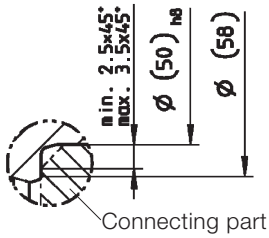

Alternatives: Single output shaft

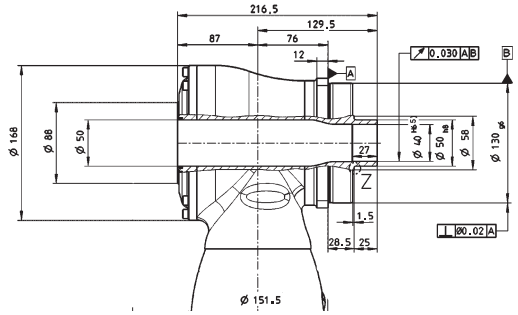

See technical data sheet for available clamping hub diameters (mass moment of inertia). Dimensions available on request.

Non-tolerated dimensions ±1 mm

1) Check motor shaft fit.
2) Min./Max. permissible motor shaft length. Longer motor shafts are adaptable, please contact us.
3) The dimensions depend on the motor.
4) Smaller motor shaft diameter is compensated by a bushing with a minimum thickness of 1 mm.
5) Tolerance h6 for mounted shaft.

⚠ Motor mounting according to operating manual

HG+ 180 1/2-stage

				1-stage					2-stage									
Ratio [a]			***i***	**3**	**4**	**5**	**7**	**10**	**12**	**16**	**20**	**25**	**28**	**35**	**40**	**50**	**70**	**100**
Max. acceleration torque (max. 1000 cycles per hour)			T_{2B}	Nm	640	640	640	550	470	640	640	640	640	640	640	640	640	550	470
				in.lb	5664	5664	5664	4868	4160	5664	5664	5664	5664	5664	5664	5664	5664	4868	4160
Nominal output torque (with n_{1N})			T_{2N}	Nm	400	400	400	380	360	400	400	400	400	400	400	400	400	380	360
				in.lb	3540	3540	3540	3363	3186	3540	3540	3540	3540	3540	3540	3540	3540	3363	3186
Emergency stop torque (permitted 1000 times during the service life of the gearhead)			T_{2Not}	Nm	900	1050	1050	970	900	1050	1050	1050	1050	1050	1050	1050	1050	970	900
				in.lb	7965	9293	9293	8585	7965	9293	9293	9293	9293	9293	9293	9293	9293	8585	7965
Nominal input speed (with T_{2N} and 20°C ambient temperature) [b], [c]			n_{1N}	rpm	1600	1800	2000	1800	1800	2700	2700	2700	2700	2700	2700	2700	2900	3200	3400
Max. continuous speed (with 20% T_{2N} and 20°C ambient temperature)			n_{1Ncym}	rpm	2000	2400	2800	2500	2500	For higher speeds, please contact us.									
Max. input speed			n_{1Max}	rpm	4000	4000	4000	4000	4000	4000	4000	4000	4000	4000	4000	4000	4000	4000	4000
Mean no load running torque (with n_1 = 3000 rpm and 20°C gearhead temperature) [d]			T_{012}	Nm	16.0	13.0	11.0	16.5	14.0	3.3	2.5	2.0	1.8	1.4	1.3	1.0	1.0	1.0	1.0
				in.lb	142	115	97	146	124	29.2	22.1	17.7	15.9	12.4	11.5	8.9	8.9	8.9	8.9
Max. torsional backlash			j_t	arcmin	≤ 4														
Torsional rigidity			C_{t21}	Nm/ arcmin	71	80	91	89	88	80	80	80	80	80	80	80	91	89	88
				in.lb/ arcmin	633	711	803	791	780	708	708	708	708	708	708	708	805	788	779
Max. axial force [e]			F_{2AMax}	N	14200														
				lb_f	3195														
Max. radial force [e]			F_{2RMax}	N	14700														
				lb_f	3308														
Max. tilting moment			M_{2KMax}	Nm	3213														
				in.lb	28435														
Efficiency at full load			η	%	96					94									
Service life (For calculation, see the Chapter "Information")			L_h	h	> 20000														
Weight incl. standardadapter plate			m	kg	45.4					47									
				lb_m	100					104									
Operating noise (with n_1 = 3000 rpm no load)			L_{PA}	dB(A)	≤ 68														
Max. permitted housing temperature				°C	+90														
				F	194														
Ambient temperature				°C	0 to +40														
				F	32 to 104														
Lubrication					Lubricated for life														
Paint					Blue RAL 5002														
Direction of rotation					Motor and gearhead opposite directions														
Protection class					IP 65														
Moment of inertia (relates to the drive) Clamping hub diameter [mm]	K	38	J_1	kgcm²	–	–	–	–	–	15.3	13.9	12.3	12.0	10.9	10.7	10.1	10.0	9.95	9.91
				10^{-3} in.lb.s²						13.5	12.3	10.9	10.6	9.65	9.48	8.96	8.88	8.80	8.77
	M	48	J_1	kgcm²	73.3	51.6	42.1	34.0	29.7	30.0	28.7	27.0	26.7	25.6	25.4	24.8	24.7	24.7	24.6
				10^{-3} in.lb.s²	64.9	45.6	37.3	30.1	26.3	26.6	25.4	23.9	23.6	22.7	22.5	22.0	21.9	21.8	21.8

[a] Other ratios available on request
[b] Higher speeds are possible if the nominal torque is reduced
[c] For higher ambient temperatures, please reduce input speed
[d] Idling torques decrease during operation
[e] Refers to center of the output shaft or flange

Please contact us for information on the best configuration for S1 conditions of use (continuous operation).

View A

1-stage:

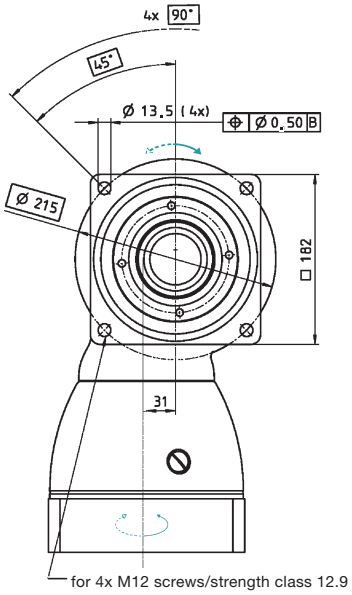

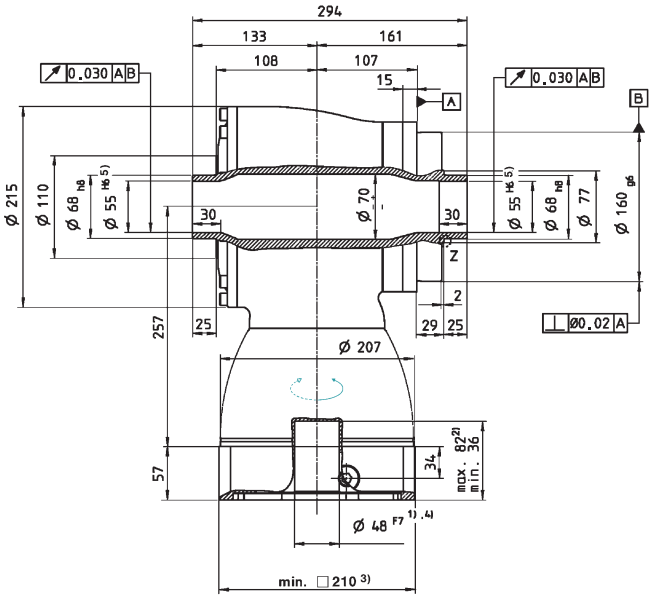

2-stage:

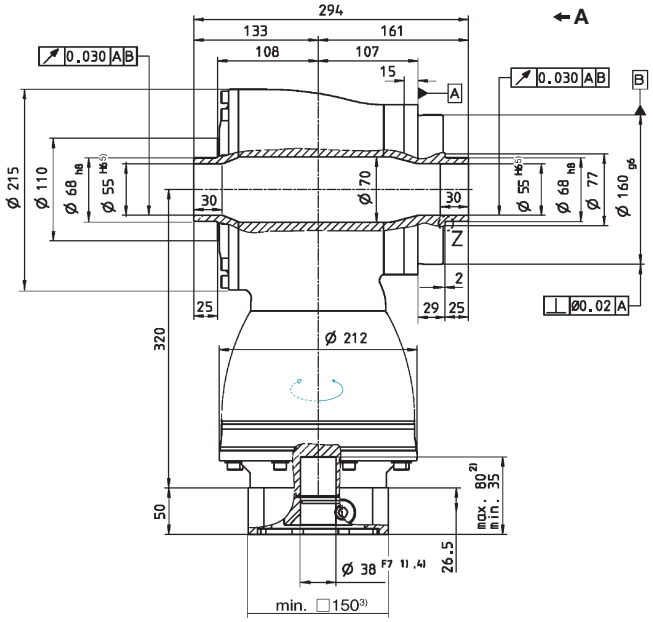

Z: Connecting part

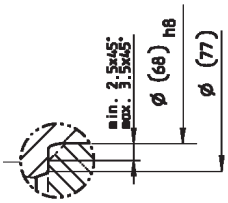

Alternatives: Single output shaft

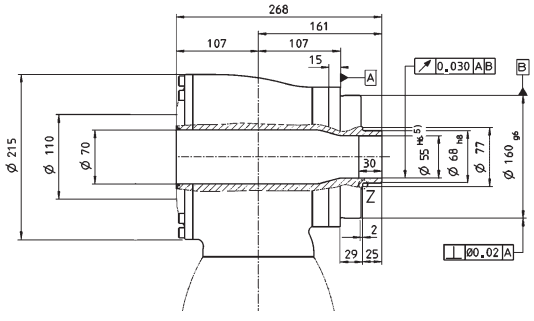

See technical data sheet for available clamping hub diameters (mass moment of inertia). Dimensions available on request.

Non-tolerated dimensions ±1 mm

1) Check motor shaft fit.
2) Min./Max. permissible motor shaft length. Longer motor shafts are adaptable, please contact us.
3) The dimensions depend on the motor.
4) Smaller motor shaft diameter is compensated by a bushing with a minimum thickness of 1 mm.
5) Tolerance h6 for mounted shaft.

⚠ Motor mounting according to operating manual

HG+

HG+ - **machine shaft installation**

A shrink disc is used to fit the mounted shaft to the gearhead. The shrink disc is not included in the HG+ gearhead scope of delivery and must be ordered as an accessory (see table).

Gearhead type	Shrink disc	d	D	A	H*	H2*	J
HG+ 060	HSD18-22	18	44	30	15	19	0,393
HG+ 075	HSD24-22	24	50	36	18	22	0,753
HG+ 100	HSD36-22	36	72	52	22	27,3	3,94
HG+ 140	HSD50-22	50	90	68	26	31,3	11,1
HG+ 180	HSD68-22	68	115	86	29	35,4	31,1

* in unclamped state

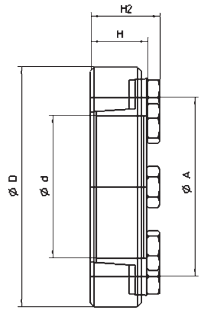

One shrink disc per gearhead is sufficient.
Installing two shrink discs is also possible on applications involving different machine shafts, for example.

Please refer to the HG+ operating instructions for information on correct shrink disc installation. The instructions are enclosed with the order.



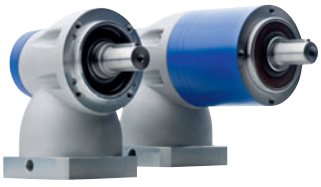

LK+/LPK+ – Economical bevel gears with optional planetary stage

LK+/LPK+

Details

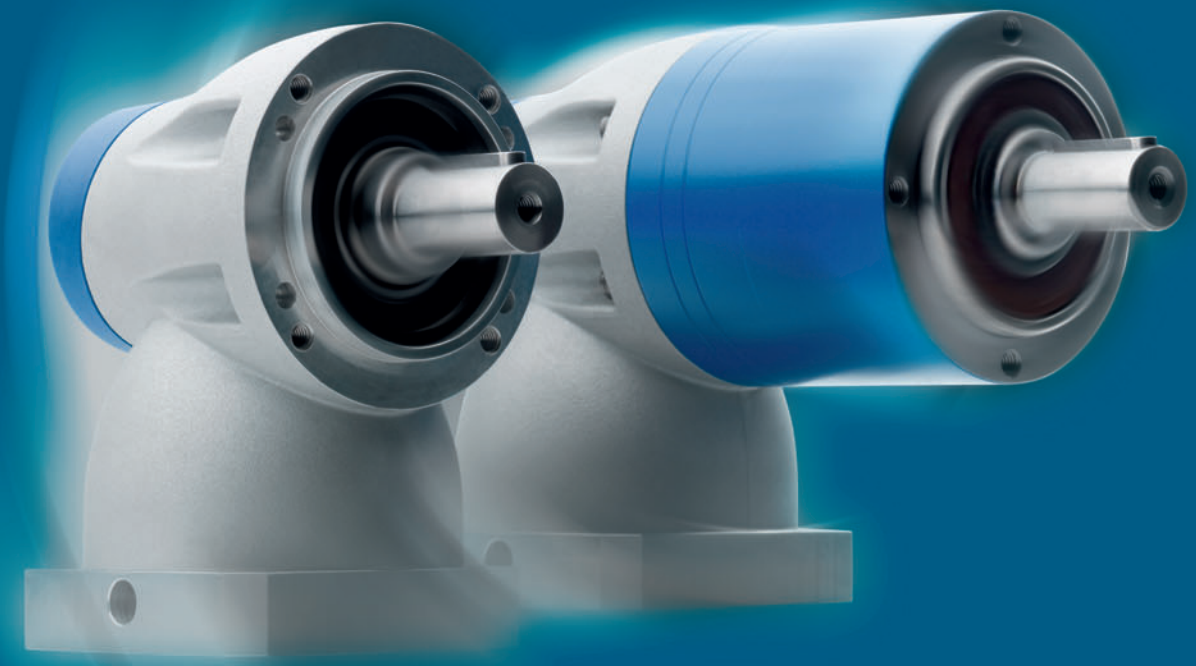

			1-stage
Ratio	***i***		**1**
Max. acceleration torque (max. 1000 cycles per hour)	T_{2B}	Nm	2.5
		in.lb	22
Nominal output torque (with n_{1N})	T_{2N}	Nm	1.2
		in.lb	11
Emergency stop torque (permitted 1000 times during the service life of the gearhead)	T_{2Not}	Nm	5
		in.lb	44
Nominal input speed (with T_{2N} and 20°C ambient temperature) [a]	n_{1N}	rpm	3200
Max. input speed	n_{1Max}	rpm	5000
Mean no load running torque (with n_1 = 3000 rpm and 20°C gearhead temperature)	T_{012}	Nm	–
		in.lb	
Max. torsional backlash	j_t	arcmin	≤ 15
Torsional rigidity	C_{t21}	Nm/ arcmin	–
		in.lb/ arcmin	
Max. axial force [b]	F_{2AMax}	N	100
		lb_f	23
Max. radial force [b]	F_{2RMax}	N	650
		lb_f	146
Efficiency at full load	η	%	95
Service life (For calculation, see the Chapter “Information”)	L_h	h	> 20000
Weight incl. standard adapter plate	*m*	kg	0.7
		lb_m	1.5
Operating noise (with n_1 = 3000 rpm no load)	L_{PA}	dB(A)	–
Max. permitted housing temperature		°C	+90
		F	194
Ambient temperature		°C	0 to +40
		F	32 to 104
Lubrication			Lubricated for life
Paint			without
Direction of rotation			Motor and gearhead same direction
Protection class			IP 64
Moment of inertia (relates to the drive)	J_1	$kgcm^2$	0.14
		10^{-3} in.lb.s²	0.12

[a] For higher ambient temperatures, please reduce input speed
[b] Refers to center of the output shaft, if n_2 = 1000 rpm

1-stage:

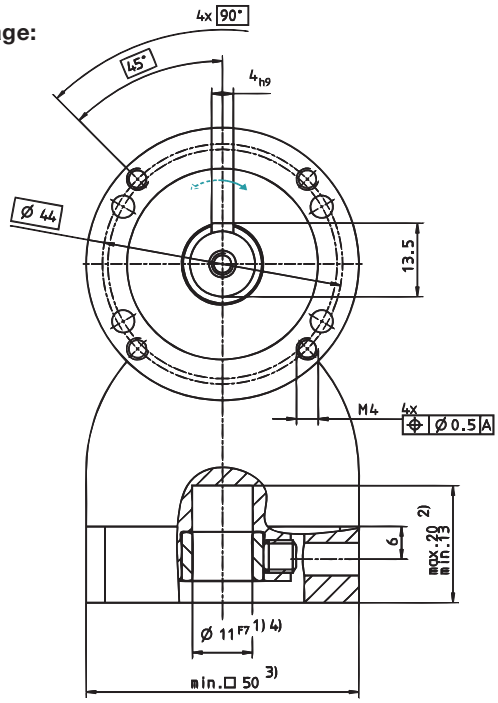

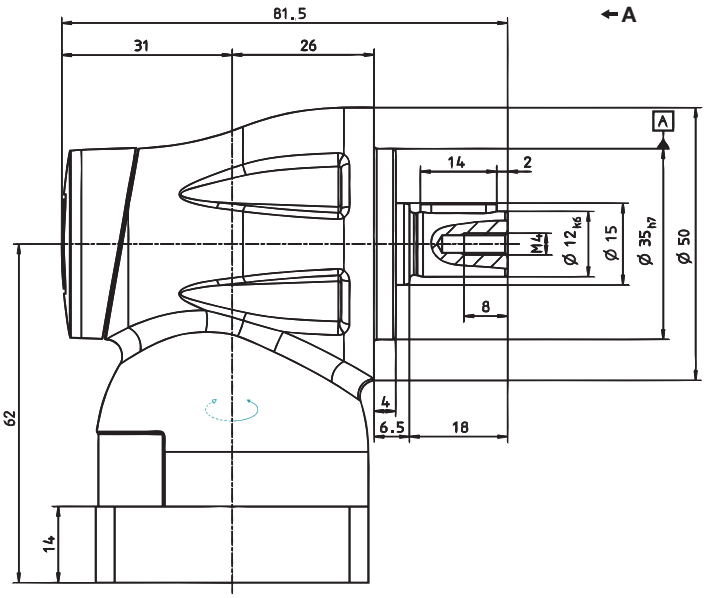

The through bore holes are not intended for attaching components to the machine. Please contact us if you have any questions.

Non-tolerated dimensions ±1 mm

1) Check motor shaft fit.
2) Min./Max. permissible motor shaft length. Longer motor shafts are adaptable, please contact us.
3) The dimensions depend on the motor.
4) Smaller motor shaft diameter is compensated by a bushing.

⚠ Motor mounting according to operating manual



			1-stage
Ratio	***i***		**1**
Max. acceleration torque (max. 1000 cycles per hour)	T_{2B}	Nm	7
		in.lb	62
Nominal output torque (with n_{1N})	T_{2N}	Nm	3.7
		in.lb	33
Emergencye stop torque (permitted 1000 times during the service life of the gearhead)	T_{2Not}	Nm	15
		in.lb	133
Nominal input speed (with T_{2N} and 20°C ambient temperature) [a]	n_{1N}	rpm	3000
Max. input speed	n_{1Max}	rpm	4500
Mean no load running torque (with n_1 = 3000 rpm and 20°C gearhead temperature)	T_{012}	Nm	0.3
		in.lb	2.7
Max. torsional backlash	j_t	arcmin	≤ 15
Torsional rigidity	C_{t21}	Nm/ arcmin	–
		in.lb/ arcmin	
Max. axial force [b]	F_{2AMax}	N	200
		lb_f	45
Max. radial force [b]	F_{2RMax}	N	1450
		lb_f	326
Efficiency at full load	η	%	95
Service life (For calculation, see the Chapter “Information”)	L_h	h	> 20000
Weight incl. standard adapter plate	m	kg	1.9
		lb_m	4.2
Operating noise (with n_1 = 3000 rpm no load)	L_{PA}	dB(A)	–
Max. permitted housing temperature		°C	+90
		F	194
Ambient temperature		°C	0 to +40
		F	32 to 104
Lubrication			Lubricated for life
Paint			without
Direction of rotation			Motor and gearhead same direction
Protection class			IP 64
Moment of inertia (relates to the drive)	J_1	$kgcm^2$	0.73
		10^{-3} in.lb.s²	0.65

[a] For higher ambient temperatures, please reduce input speed
[b] Refers to center of the output shaft, if n_2 = 1000 rpm

1-stage:

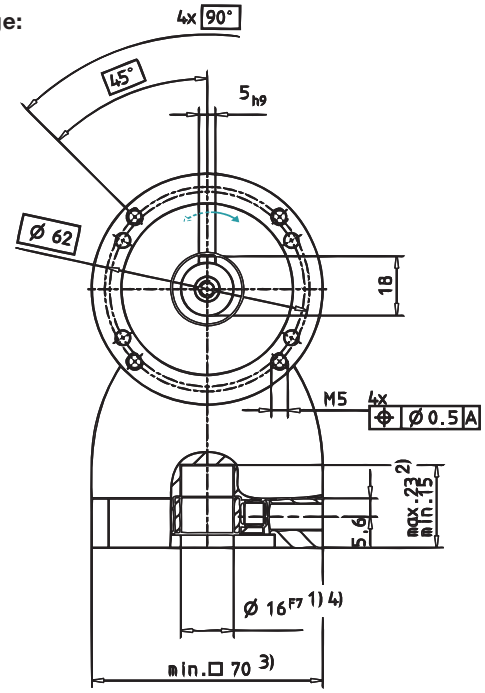

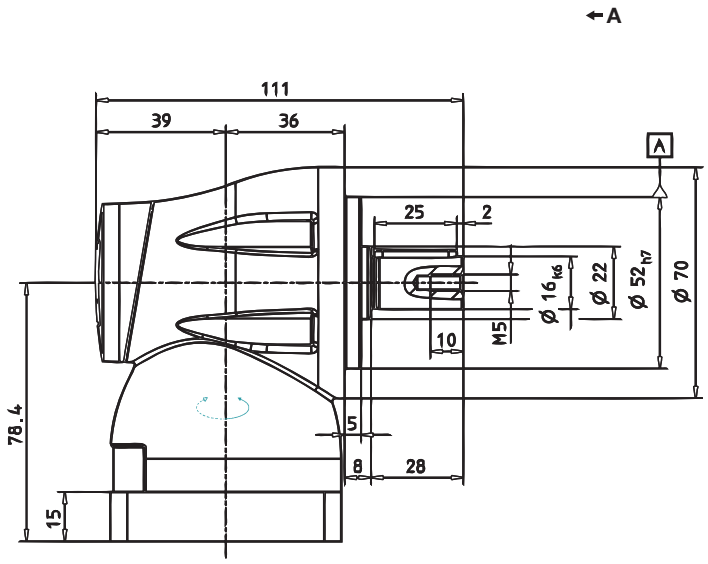

The through bore holes are not intended for attaching components to the machine. Please contact us if you have any questions.

Non-tolerated dimensions ±1 mm

1) Check motor shaft fit.
2) Min./Max. permissible motor shaft length. Longer motor shafts are adaptable, please contact us.
3) The dimensions depend on the motor.
4) Smaller motor shaft diameter is compensated by a bushing.

⚠ Motor mounting according to operating manual

			1-stage
Ratio	***i***		**1**
Max. acceleration torque (max. 1000 cycles per hour)	T_{2B}	Nm	19
		in.lb	168
Nominal output torque (with n_{1N})	T_{2N}	Nm	9.3
		in.lb	82
Emergencye stop torque (permitted 1000 times during the service life of the gearhead)	T_{2Not}	Nm	37
		in.lb	327
Nominal input speed (with T_{2N} and 20°C ambient temperature) [a]	n_{1N}	rpm	2700
Max. input speed	n_{1Max}	rpm	4000
Mean no load running torque (with n_1 = 3000 rpm and 20°C gearhead temperature)	T_{012}	Nm	0.9
		in.lb	8.0
Max. torsional backlash	j_t	arcmin	≤ 15
Torsional rigidity	C_{t21}	Nm/ arcmin	1.26
		in.lb/ arcmin	11.2
Max. axial force [b]	F_{2AMax}	N	450
		lb_f	101
Max. radial force [b]	F_{2RMax}	N	2400
		lb_f	540
Efficiency at full load	η	%	95
Service life (For calculation, see the Chapter “Information”)	L_h	h	> 20000
Weight incl. standard adapter plate	m	kg	3.2
		lb_m	7.1
Operating noise (with n_1 = 3000 rpm no load)	L_{PA}	dB(A)	–
Max. permitted housing temperature		°C	+90
		F	194
Ambient temperature		°C	0 to +40
		F	32 to 104
Lubrication			Lubricated for life
Paint			without
Direction of rotation			Motor and gearhead same direction
Protection class			IP 64
Moment of inertia (relates to the drive)	J_1	$kgcm^2$	3.3
		10^{-3} in.lb.s²	2.9

[a] For higher ambient temperatures, please reduce input speed
[b] Refers to center of the output shaft, if n_2 = 1000 rpm

1-stage:

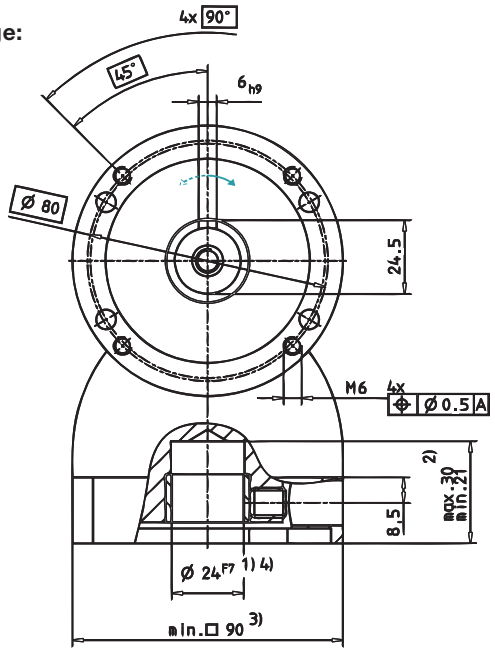

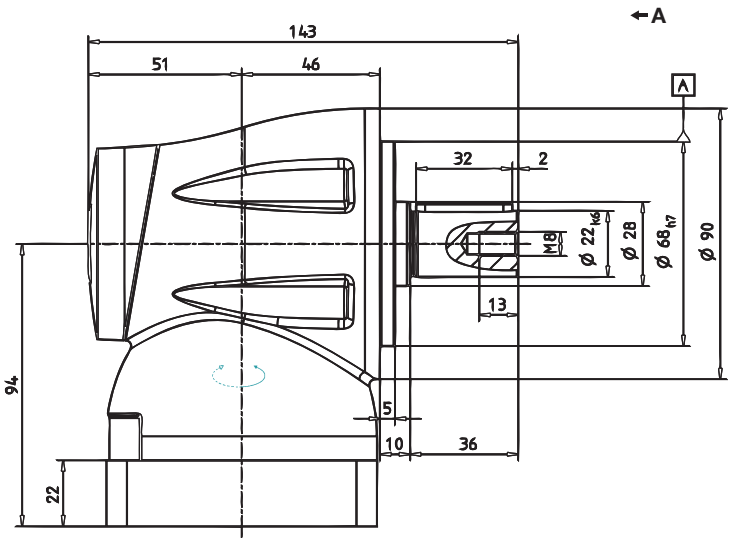

The through bore holes are not intended for attaching components to the machine. Please contact us if you have any questions.

Non-tolerated dimensions ±1 mm

1) Check motor shaft fit.
2) Min./Max. permissible motor shaft length. Longer motor shafts are adaptable, please contact us.
3) The dimensions depend on the motor.
4) Smaller motor shaft diameter is compensated by a bushing.

⚠ Motor mounting according to operating manual

			1-stage
Ratio	***i***		**1**
Max. acceleration torque (max. 1000 cycles per hour)	T_{2B}	Nm	45
		in.lb	398
Nominal output torque (with n_{1N})	T_{2N}	Nm	23
		in.lb	204
Emergency stop torque (permitted 1000 times during the service life of the gearhead)	T_{2Not}	Nm	93
		in.lb	823
Nominal input speed (with T_{2N} and 20°C ambient temperature) [a]	n_{1N}	rpm	2100
Max. input speed	n_{1Max}	rpm	3500
Mean no load running torque (with n_1 = 3000 rpm and 20°C gearhead temperature)	T_{012}	Nm	2.3
		in.lb	20.4
Max. torsional backlash	j_t	arcmin	≤ 15
Torsional rigidity	C_{t21}	Nm/ arcmin	–
		in.lb/ arcmin	
Max. axial force [b]	F_{2AMax}	N	750
		lb_f	169
Max. radial force [b]	F_{2RMax}	N	4600
		lb_f	1035
Efficiency at full load	η	%	95
Service life (For calculation, see the Chapter “Information”)	L_h	h	> 20000
Weight incl. standard adapter plate	m	kg	8.9
		lb_m	19.7
Operating noise (with n_1 = 3000 rpm no load)	L_{PA}	dB(A)	–
Max. permitted housing temperature		°C	+90
		F	194
Ambient temperature		°C	0 to +40
		F	32 to 104
Lubrication			Lubricated for life
Paint			without
Direction of rotation			Motor and gearhead same direction
Protection class			IP 64
Moment of inertia (relates to the drive)	J_1	$kgcm^2$	13.9
		10^{-3} in.lb.s²	12.3

[a] For higher ambient temperatures, please reduce input speed
[b] Refers to center of the output shaft, if n_2 = 1000 rpm

1-stage:

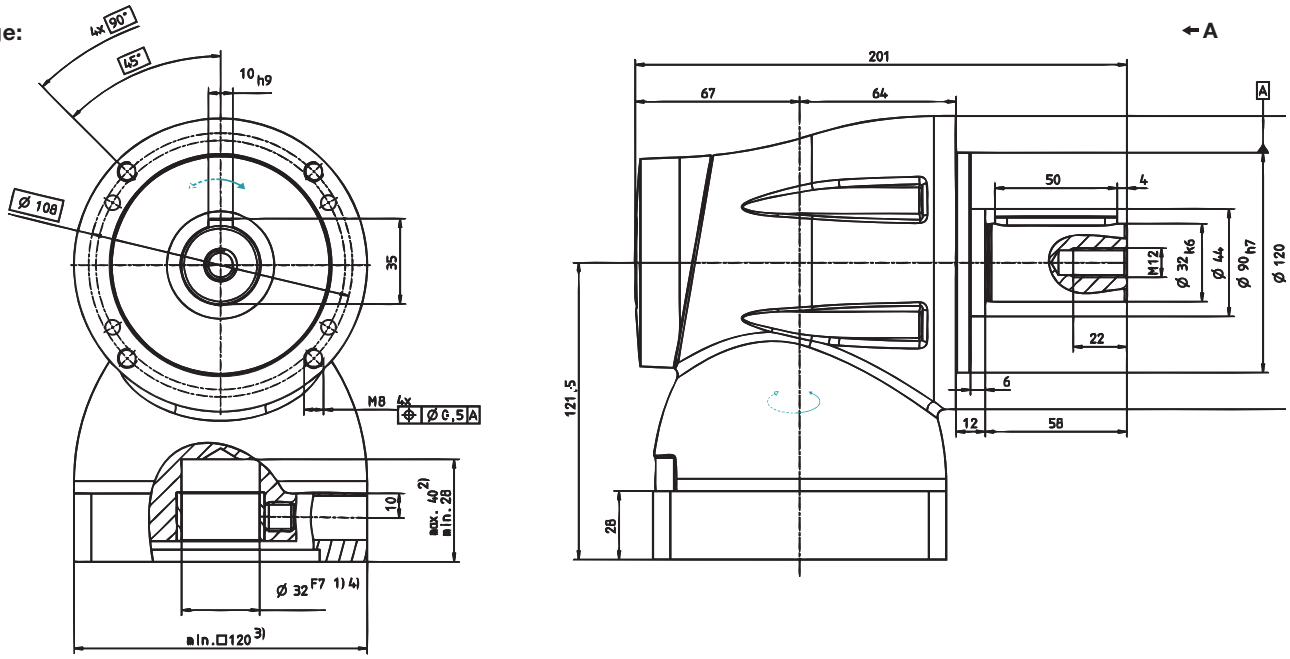

The through bore holes are not intended for attaching components to the machine. Please contact us if you have any questions.

Non-tolerated dimensions ±1 mm

1) Check motor shaft fit.
2) Min./Max. permissible motor shaft length. Longer motor shafts are adaptable, please contact us.
3) The dimensions depend on the motor.
4) Smaller motor shaft diameter is compensated by a bushing.

⚠ Motor mounting according to operating manual

			1-stage
Ratio	***i***		**1**
Max. acceleration torque (max. 1000 cycles per hour)	T_{2B}	Nm	93
		in.lb	823
Nominal output torque (with n_{1N})	T_{2N}	Nm	66
		in.lb	584
Emergency stop torque (permitted 1000 times during the service life of the gearhead)	T_{2Not}	Nm	194
		in.lb	1717
Nominal input speed (with T_{2N} and 20°C ambient temperature) [a]	n_{1N}	rpm	1600
Max. input speed	n_{1Max}	rpm	3000
Mean no load running torque (with n_1 = 3000 rpm and 20°C gearhead temperature)	T_{012}	Nm	–
		in.lb	
Max. torsional backlash	j_t	arcmin	≤ 15
Torsional rigidity	C_{t21}	Nm/ arcmin	–
		in.lb/ arcmin	
Max. axial force [b]	F_{2AMax}	N	1000
		lb_f	225
Max. radial force [b]	F_{2RMax}	N	7500
		lb_f	1688
Efficiency at full load	η	%	95
Service life (For calculation, see the Chapter “Information”)	L_h	h	> 20000
Weight incl. standard adapter plate	m	kg	18.9
		lb_m	42
Operating noise (with n_1 = 3000 rpm no load)	L_{PA}	dB(A)	–
Max. permitted housing temperature		°C	+90
		F	194
Ambient temperature		°C	0 to +40
		F	32 to 104
Lubrication			Lubricated for life
Paint			without
Direction of rotation			Motor and gearhead same direction
Protection class			IP 64
Moment of inertia (relates to the drive)	J_1	$kgcm^2$	57.1
		10^{-3} in.lb.s²	50.5

[a] For higher ambient temperatures, please reduce input speed
[b] Refers to center of the output shaft, if n_2 = 1000 rpm

1-stage:

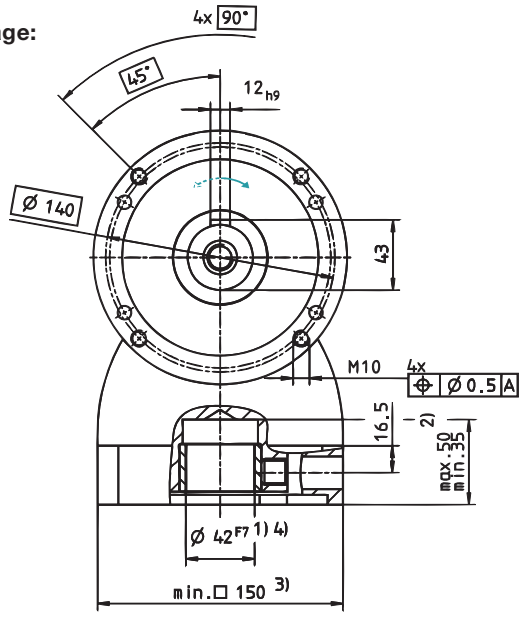

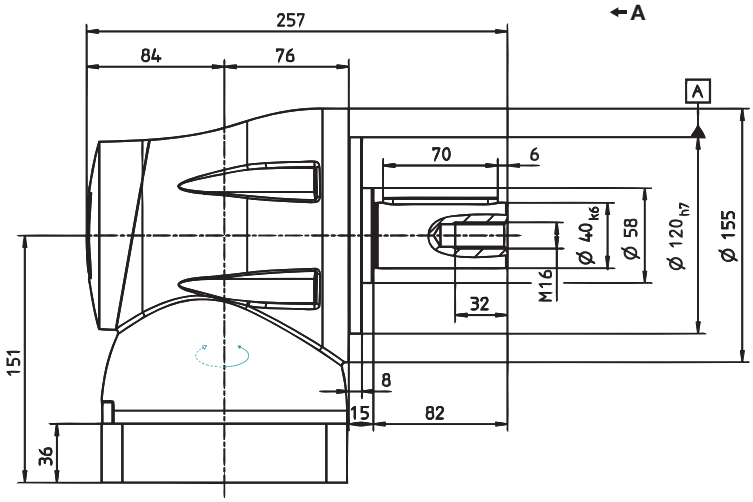

The through bore holes are not intended for attaching components to the machine. Please contact us if you have any questions.

Non-tolerated dimensions ±1 mm

1) Check motor shaft fit.
2) Min./Max. permissible motor shaft length. Longer motor shafts are adaptable, please contact us.
3) The dimensions depend on the motor.
4) Smaller motor shaft diameter is compensated by a bushing.

⚠ Motor mounting according to operating manual

LPK+ 050 2/3-stage

			2-stage		3-stage		
Ratio	***i***		**5**	**10**	**25**	**50**	**100**
Max. acceleration torque (max. 1000 cycles per hour)	T_{2B}	Nm	12	11	12	12	11
		in.lb	106	97	106	106	97
Nominal output torque (with n_{1N})	T_{2N}	Nm	5.7	5.2	5.7	5.7	5.2
		in.lb	50	46	50	50	46
Emergency stop torque (permitted 1000 times during the service life of the gearhead)	T_{2Not}	Nm	26	26	26	26	26
		in.lb	230	230	230	230	230
Nominal input speed (with T_{2N} and 20°C ambient temperature) [a]	n_{1N}	rpm	3200	3200	3200	3200	3200
Max. input speed	n_{1Max}	rpm	5000	5000	5000	5000	5000
Mean no load running torque (with n_1 = 3000 rpm and 20°C gearhead temperature)	T_{012}	Nm	–	–	–	–	–
		in.lb					
Max. torsional backlash	j_t	arcmin	≤ 13		≤ 15		
Torsional rigidity	C_{t21}	Nm/ arcmin	1.9		–		
		in.lb/ arcmin	16.8				
Max. axial force [b]	F_{2AMax}	N	700		700		
		lb_f	158		158		
Max. radial force [b]	F_{2RMax}	N	650		650		
		lb_f	146		146		
Efficiency at full load	η	%	92		90		
Service life (For calculation, see the Chapter “Information”)	L_h	h	> 20000		> 20000		
Weight incl. standard adapter plate	*m*	kg	1.4		1.6		
		lb_m	3.1		3.5		
Operating noise (with n_1 = 3000 rpm no load)	L_{PA}	dB(A)	–				
Max. permitted housing temperature		°C	+90				
		F	194				
Ambient temperature		°C	0 to +40				
		F	32 to 104				
Lubrication			Lubricated for life				
Paint			Blue RAL 5002				
Direction of rotation			Motor and gearhead same direction				
Protection class			IP 64				
Moment of inertia (relates to the drive)	J_1	$kgcm^2$	0.156	0.156	0.156	0.156	0.156
		10^{-3} in.lb.s²	0.138	0.138	0.138	0.138	0.138

[a] For higher ambient temperatures, please reduce input speed

[b] Refers to center of the output shaft, if n_2 = 100 rpm

2-stage:

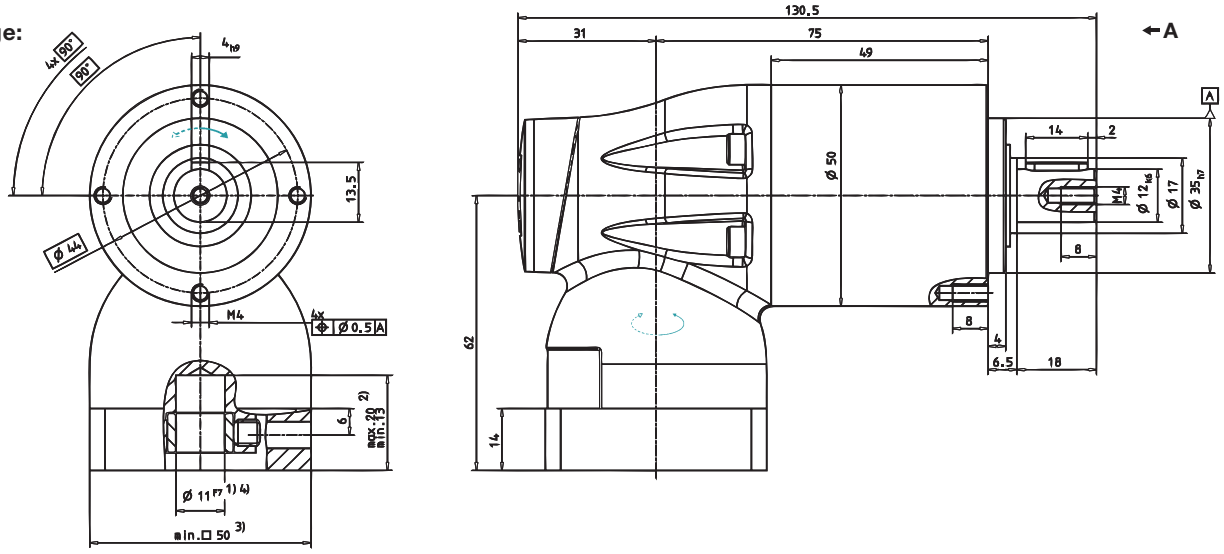

3-stage:

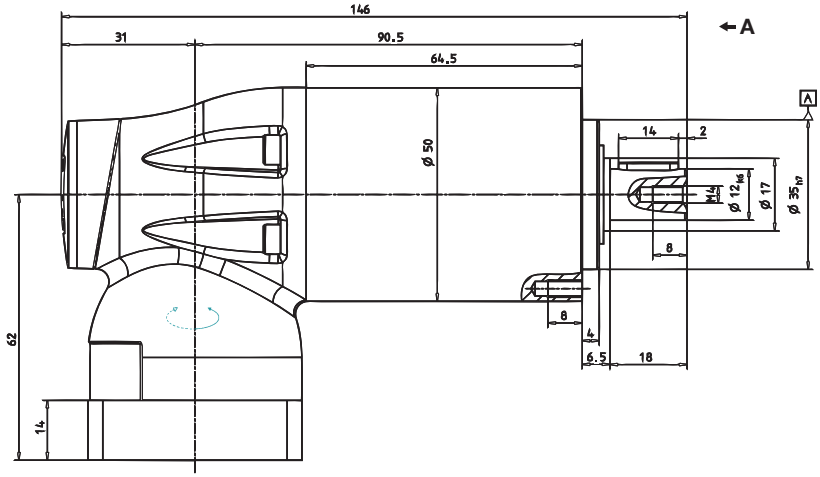

Non-tolerated dimensions ±1 mm

1) Check motor shaft fit.
2) Min./Max. permissible motor shaft length. Longer motor shafts are adaptable, please contact us.
3) The dimensions depend on the motor.
4) Smaller motor shaft diameter is compensated by a bushing.

⚠ Motor mounting according to operating manual

LPK+ 070 2/3-stage

			2-stage					3-stage						
Ratio	***i***		**3**	**4**	**5**	**7**	**10**	**15**	**16**	**25**	**30**	**50**	**70**	**100**
Max. acceleration torque (max. 1000 cycles per hour)	T_{2B}	Nm	22	29	35	35	32	32	35	35	32	35	35	32
		in.lb	195	257	310	310	283	283	310	310	283	310	310	283
Nominal output torque (with n_{1N})	T_{2N}	Nm	11	15	18	18	16.5	16.5	18	18	16.5	18	18	16.5
		in.lb	97	133	159	159	146	146	159	159	146	159	159	146
Emergency stop torque (permitted 1000 times during the service life of the gearhead)	T_{2Not}	Nm	45	60	75	75	75	75	75	75	75	75	75	75
		in.lb	398	531	664	664	664	664	664	664	664	664	664	664
Nominal input speed (with T_{2N} and 20°C ambient temperature) [b]	n_{1N}	rpm	3000	3000	3000	3000	3000	3000	3000	3000	3000	3000	3000	3000
Max. input speed	n_{1Max}	rpm	4500	4500	4500	4500	4500	4500	4500	4500	4500	4500	4500	4500
Mean no load running torque (with n_1 = 3000 rpm and 20°C gearhead temperature)	T_{012}	Nm	0.6	0.55	0.5	0.44	0.44	0.44	0.44	0.44	0.44	0.44	0.44	0.4
		in.lb	5.3	4.9	4.4	3.9	3.9	3.9	3.9	3.9	3.9	3.9	3.9	3.5
Max. torsional backlash	j_t	arcmin	≤ 11					≤ 13						
Torsional rigidity	C_{t21}	Nm/ arcmin	–					–						
		in.lb/ arcmin												
Max. axial force [c]	F_{2AMax}	N	1550					1550						
		lb_f	349					349						
Max. radial force [c]	F_{2RMax}	N	1450					1450						
		lb_f	326					326						
Efficiency at full load	η	%	92					90						
Service life (For calculation, see the Chapter "Information")	L_h	h	> 20000					> 20000						
Weight incl. standardadapter plate	*m*	kg	3.8					4.2						
		lb_m	8.4					9.3						
Operating noise (with n_1 = 3000 rpm no load)	L_{PA}	dB(A)	–											
Max. permitted housing temperature		°C	+90											
		F	194											
Ambient temperature		°C	0 to +40											
		F	32 to 104											
Lubrication			Lubricated for life											
Paint			Blue RAL 5002											
Direction of rotation			Motor and gearhead same direction											
Protection class			IP 64											
Moment of inertia (relates to the drive)	J_1	$kgcm^2$	0.85	0.85	0.85	0.85	0.85	0.85	0.85	0.85	0.85	0.85	0.85	0.85
		10^{-3} in.lb.s²	0.75	0.75	0.75	0.75	0.75	0.75	0.75	0.75	0.75	0.75	0.75	0.75

[a] For higher ambient temperatures, please reduce input speed
[b] Refers to center of the output shaft, if n_2 = 100 rpm

2-stage:

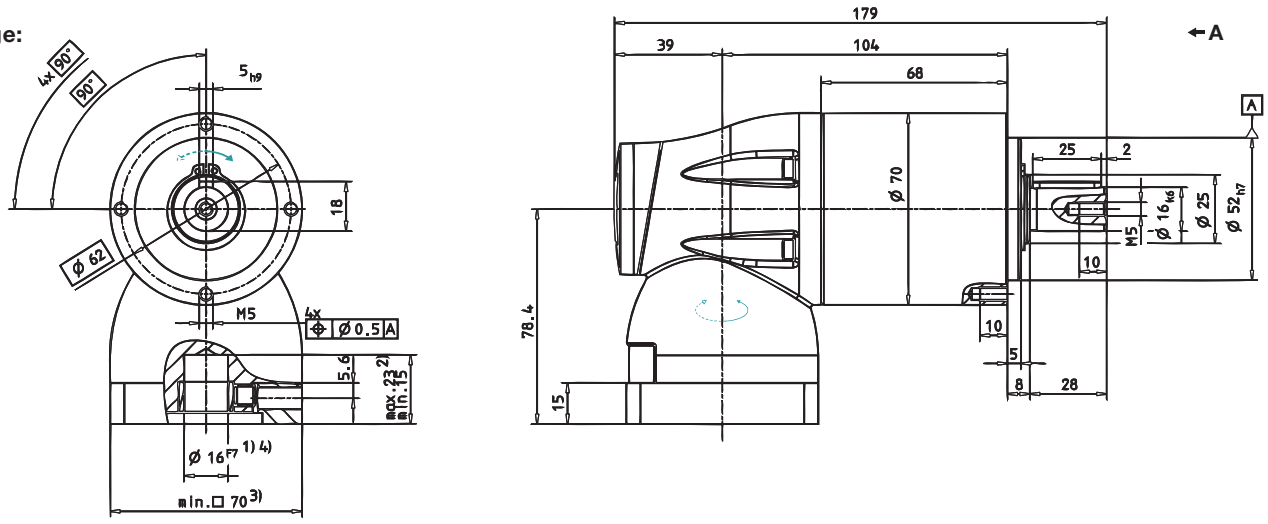

3-stage:

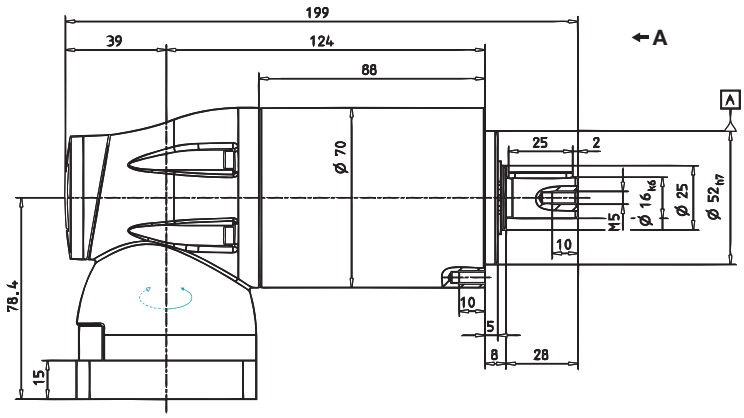

Non-tolerated dimensions ±1 mm

1) Check motor shaft fit.
2) Min./Max. permissible motor shaft length. Longer motor shafts are adaptable, please contact us.
3) The dimensions depend on the motor.
4) Smaller motor shaft diameter is compensated by a bushing.

⚠ Motor mounting according to operating manual

LPK+ 090 2/3-stage

			2-stage					3-stage						
Ratio	***i***		**3**	**4**	**5**	**7**	**10**	**15**	**16**	**25**	**30**	**50**	**70**	**100**
Max. acceleration torque (max. 1000 cycles per hour)	T_{2B}	Nm	56	74	90	90	80	80	90	90	80	90	90	80
		in.lb	496	655	797	797	708	708	797	797	708	797	797	708
Nominal output torque (with n_{1N})	T_{2N}	Nm	28	37	45	45	40	40	45	45	40	45	45	40
		in.lb	248	327	398	398	354	354	398	398	354	398	398	354
Emergency stop torque (permitted 1000 times during the service life of the gearhead)	T_{2Not}	Nm	110	150	190	190	190	190	190	190	190	190	190	190
		in.lb	974	1328	1682	1682	1682	1682	1682	1682	1682	1682	1682	1682
Nominal input speed (with T_{2N} and 20°C ambient temperature) [b]	n_{1N}	rpm	2700	2700	2700	2700	2700	2700	2700	2700	2700	2700	2700	2700
Max. input speed	n_{1Max}	rpm	4000	4000	4000	4000	4000	4000	4000	4000	4000	4000	4000	4000
Mean no load running torque (with n_1 = 3000 rpm and 20°C gearhead temperature)	T_{012}	Nm	1.3	1.3	1.2	1.1	1.1	1.1	1.1	1.1	1.1	1.1	1.1	1.0
		in.lb	12	11	11	10	10	10	10	10	10	10	10	9
Max. torsional backlash	j_t	arcmin	≤ 11					≤ 13						
Torsional rigidity	C_{t21}	Nm/ arcmin	8.5	9.5	9.5	9.5	8.5	8.5	9.5	9.5	8.5	9.5	9.5	8.5
		in.lb/ arcmin	75	84	84	84	75	75	84	84	75	84	84	75
Max. axial force [c]	F_{2AMax}	N	1900					1900						
		lb_f	428					428						
Max. radial force [c]	F_{2RMax}	N	2400					2400						
		lb_f	540					540						
Efficiency at full load	η	%	92					90						
Service life (For calculation, see the Chapter "Information")	L_h	h	> 20000					> 20000						
Weight incl. standard adapter plate	*m*	kg	6.9					7.9						
		lb_m	15.2					17.5						
Operating noise (with n_1 = 3000 rpm no load)	L_{PA}	dB(A)	–											
Max. permitted housing temperature		°C	+90											
		F	194											
Ambient temperature		°C	0 to +40											
		F	32 to 104											
Lubrication			Lubricated for life											
Paint			Blue RAL 5002											
Direction of rotation			Motor and gearhead same direction											
Protection class			IP 64											
Moment of inertia (relates to the drive)	J_1	$kgcm^2$	4.1	4.1	4.1	4.1	4.1	4.1	4.1	4.1	4.1	4.1	4.1	4.1
		10^{-3} in.lb.s²	3.6	3.6	3.6	3.6	3.6	3.6	3.6	3.6	3.6	3.6	3.6	3.6

[a] For higher ambient temperatures, please reduce input speed
[b] Refers to center of the output shaft, if n_2 = 100 rpm

2-stage:

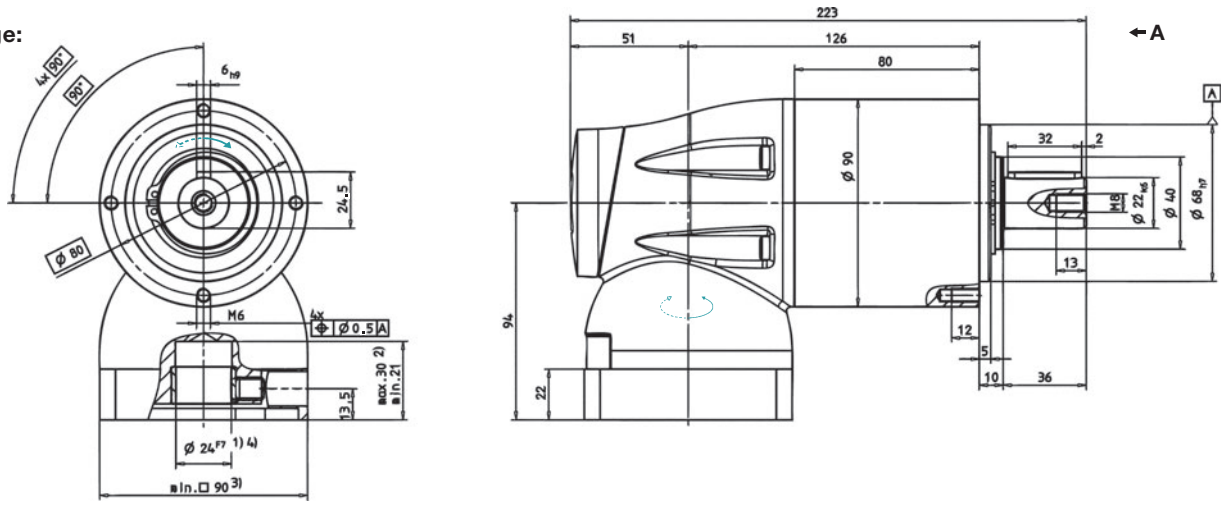

3-stage:

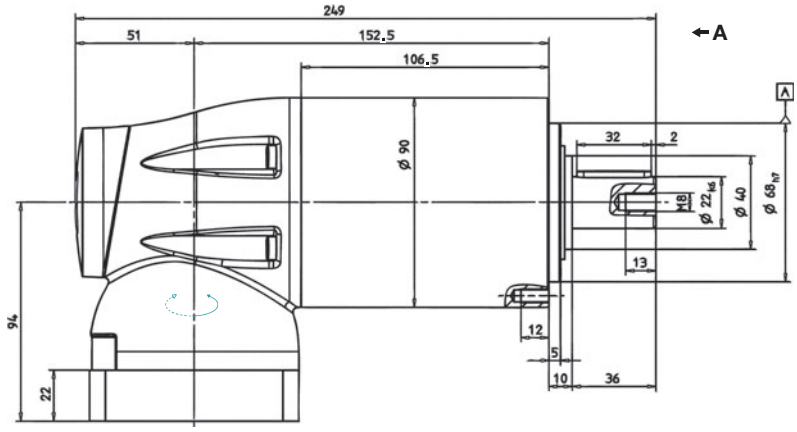

Non-tolerated dimensions ±1 mm

1) Check motor shaft fit.
2) Min./Max. permissible motor shaft length. Longer motor shafts are adaptable, please contact us.
3) The dimensions depend on the motor.
4) Smaller motor shaft diameter is compensated by a bushing.

⚠ Motor mounting according to operating manual

LPK+ 120 2/3-stage

			2-stage					3-stage						
Ratio	***i***		**3**	**4**	**5**	**7**	**10**	**15**	**16**	**25**	**30**	**50**	**70**	**100**
Max. acceleration torque (max. 1000 cycles per hour)	T_{2B}	Nm	136	181	220	220	200	200	220	220	200	220	220	200
		in.lb	1204	1602	1947	1947	1770	1770	1947	1947	1770	1947	1947	1770
Nominal output torque (with n_{1N})	T_{2N}	Nm	68	91	110	110	100	100	110	110	100	110	110	100
		in.lb	602	805	974	974	885	885	974	974	885	974	974	885
Emergency stop torque (permitted 1000 times during the service life of the gearhead)	T_{2Not}	Nm	280	380	480	480	480	480	480	480	480	480	480	480
		in.lb	2478	3363	4248	4248	4248	4248	4248	4248	4248	4248	4248	4248
Nominal input speed (with T_{2N} and 20°C ambient temperature) [b]	n_{1N}	rpm	2100	2100	2100	2100	2100	2100	2100	2100	2100	2100	2100	2100
Max. input speed	n_{1Max}	rpm	3500	3500	3500	3500	3500	3500	3500	3500	3500	3500	3500	3500
Mean no load running torque (with n_1 = 3000 rpm and 20°C gearhead temperature)	T_{012}	Nm	3.5	3.3	3.2	3.1	3.1	2.9	2.9	2.8	2.7	2.7	2.7	2.7
		in.lb	31	29	28	27	27	26	26	25	24	24	24	24
Max. torsional backlash	j_t	arcmin	≤ 11					≤ 13						
Torsional rigidity	C_{t21}	Nm/ arcmin	21.7					–						
		in.lb/ arcmin	192.0											
Max. axial force [c]	F_{2AMax}	N	4000					4000						
		lb_f	900					900						
Max. radial force [c]	F_{2RMax}	N	4600					4600						
		lb_f	1035					1035						
Efficiency at full load	η	%	92					90						
Service life (For calculation, see the Chapter "Information")	L_h	h	> 20000					> 20000						
Weight incl. standard adapter plate	*m*	kg	16.8					19.2						
		lb_m	37.1					42.4						
Operating noise (with n_1 = 3000 rpm no load)	L_{PA}	dB(A)	–											
Max. permitted housing temperature		°C	+90											
		F	194											
Ambient temperature		°C	0 to +40											
		F	32 to 104											
Lubrication			Lubricated for life											
Paint			Blue RAL 5002											
Direction of rotation			Motor and gearhead same direction											
Protection class			IP 64											
Moment of inertia (relates to the drive)	J_1	$kgcm^2$	16.6	16.6	16.6	16.6	16.6	16.7	16.7	16.7	16.7	16.7	16.7	16.7
		10^{-3} in.lb.s²	14.7	14.7	14.7	14.7	14.7	14.7	14.7	14.7	14.7	14.7	14.7	14.7

[a] For higher ambient temperatures, please reduce input speed

[b] Refers to center of the output shaft, if n_2 = 100 rpm

2-stage:

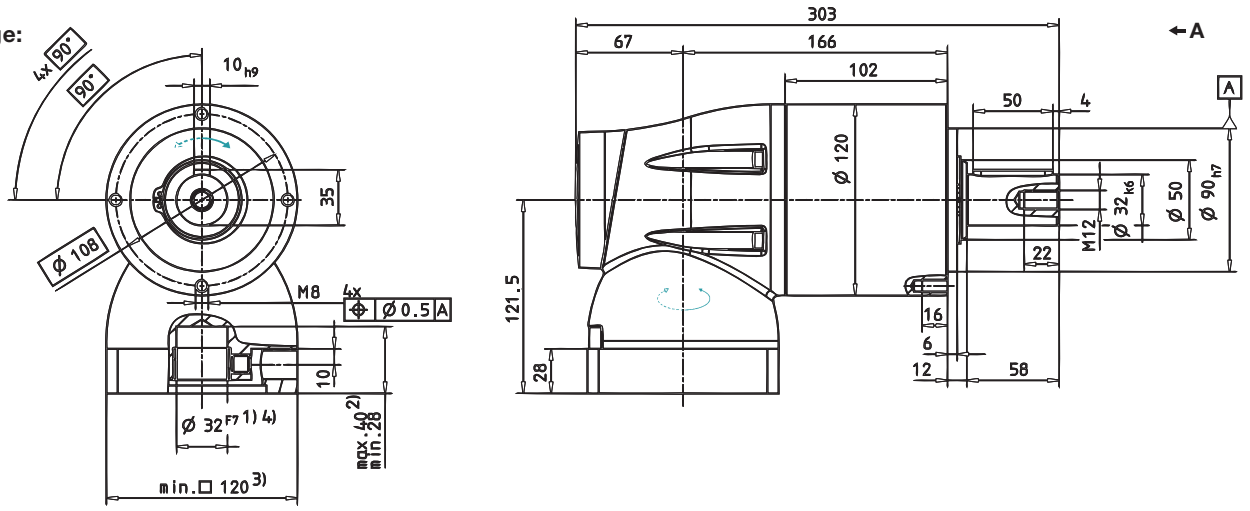

3-stage:

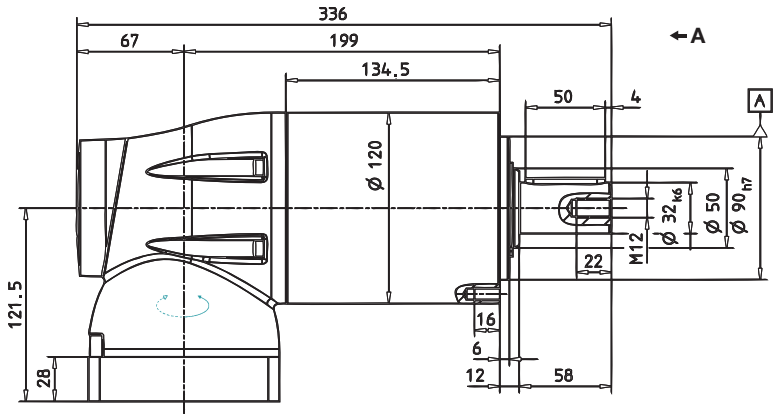

Non-tolerated dimensions ±1 mm

1) Check motor shaft fit.
2) Min./Max. permissible motor shaft length. Longer motor shafts are adaptable, please contact us.
3) The dimensions depend on the motor.
4) Smaller motor shaft diameter is compensated by a bushing.

⚠ Motor mounting according to operating manual

LPK+ 155 2/3-stage

			2-stage		3-stage		
Ratio	***i***		**5**	**10**	**25**	**50**	**100**
Max. acceleration torque (max. 1000 cycles per hour)	T_{2B}	Nm	450	350	450	450	350
		in.lb	3983	3098	3983	3983	3098
Nominal output torque (with n_{1N})	T_{2N}	Nm	320	190	320	320	190
		in.lb	2832	1682	2832	2832	1682
Emergency stop torque (permitted 1000 times during the service life of the gearhead)	T_{2Not}	Nm	1000	1000	1000	1000	1000
		in.lb	8850	8850	8850	8850	8850
Nominal input speed (with T_{2N} and 20°C ambient temperature) [a]	n_{1N}	rpm	1600	1600	1600	1600	1600
Max. input speed	n_{1Max}	rpm	3000	3000	3500	3500	3500
Mean no load running torque (with n_1=3000 rpm and 20°C gearhead temperature)	T_{012}	Nm	–	–	–	–	–
		in.lb					
Max. torsional backlash	j_t	arcmin	≤ 11		≤ 13		
Torsional rigidity	C_{t21}	Nm/ arcmin	43.7		–		
		in.lb/ arcmin	386.7				
Max. axial force [b]	F_{2AMax}	N	6000		6000		
		lb_f	1350		1350		
Max. radial force [b]	F_{2RMax}	N	7500		7500		
		lb_f	1688		1688		
Efficiency at full load	η	%	92		90		
Service life (For calculation, see the Chapter “Information”)	L_h	h	> 20000		> 20000		
Weight incl. standard adapter plate	m	kg	34.7		38.7		
		lb_m	76.7		85.5		
Operating noise (with n_1=3000 rpm no load)	L_{PA}	dB(A)	–				
Max. permitted housing temperature		°C	+90				
		F	194				
Ambient temperature		°C	0 to +40				
		F	32 to 104				
Lubrication			Lubricated for life				
Paint			Blue RAL 5002				
Direction of rotation			Motor and gearhead same direction				
Protection class			IP 64				
Moment of inertia (relates to the drive)	J_1	kgcm²	75.1	75.1	16.8	16.8	16.8
		10^{-3} in.lb.s²	66.5	66.5	14.8	14.8	14.8

[a] For higher ambient temperatures, please reduce input speed

[b] Refers to center of the output shaft, if n_2 = 100 rpm

2-stage:

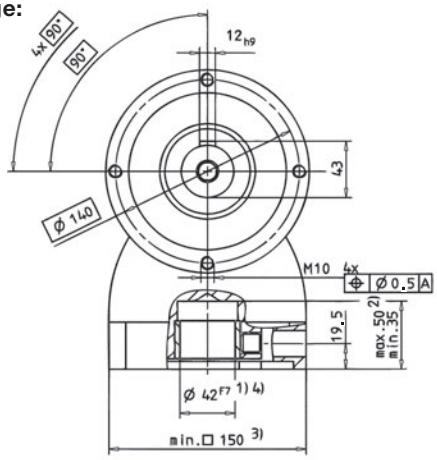

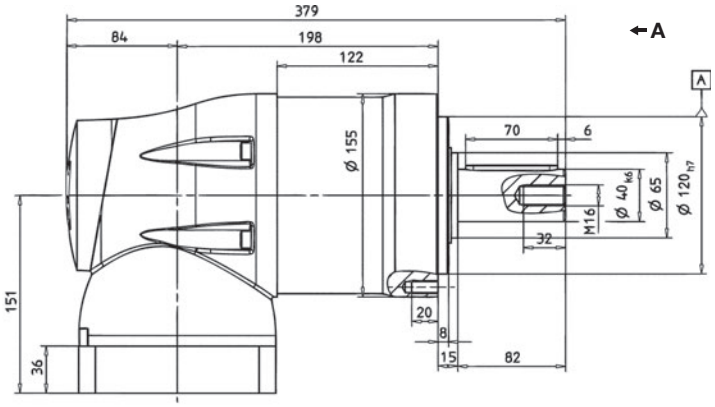

3-stage:

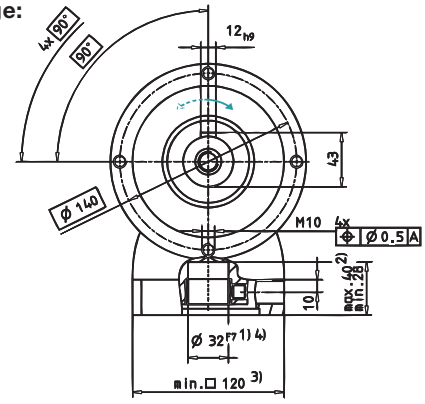

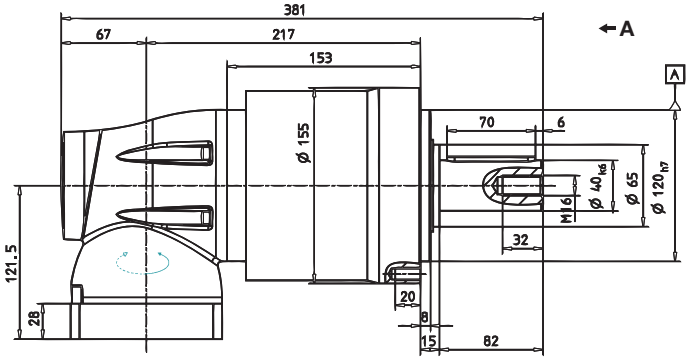

Non-tolerated dimensions ±1 mm

1) Check motor shaft fit.
2) Min./Max. permissible motor shaft length. Longer motor shafts are adaptable, please contact us.
3) The dimensions depend on the motor.
4) Smaller motor shaft diameter is compensated by a bushing.

⚠ Motor mounting according to operating manual

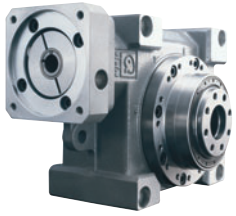

V-DRIVE® – The servo worm gearhead with solid shaft, hollow shaft and hollow shaft flange outputs

V-DRIVE®

Details

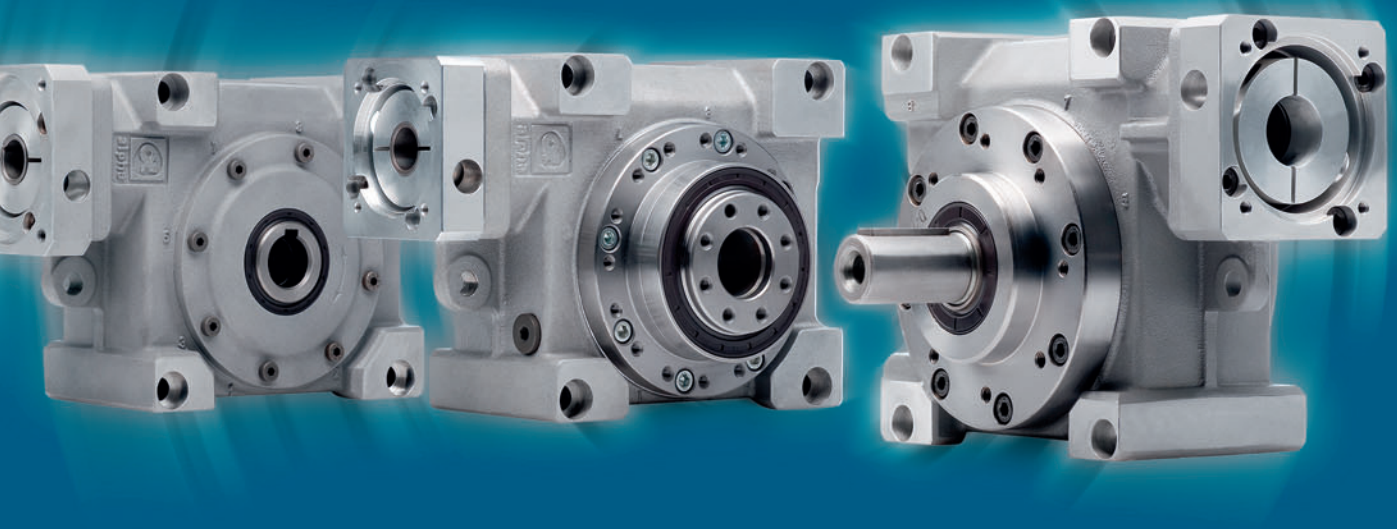

VDT, VDH, VDS

Technical data

Size				050	063	080	100
Max. acceleration torque (n_1 = 3000 rpm) [a]	T_{2B} Nm (in.lb)		i = 4	59 (523)	138 (1222)	247 (2186)	420 (3717)
			i = 7	77 (682)	176 (1558)	320 (2832)	551 (4877)
			i = 10	81 (717)	194 (1717)	319 (2824)	606 (5364)
			i = 16	88 (779)	209 (1850)	381 (3372)	629 (5567)
			i = 28	97 (859)	224 (1983)	413 (3656)	718 (6355)
			i = 40	81 (717)	217 (1921)	362 (3204)	692 (6125)
Nominal output torque (n_1 = 3000 rpm) [a]	T_{2N} Nm (in.lb)		i = 4	43 (381)	87 (770)	155 (1372)	261 (2310)
			i = 7	56 (496)	124 (1098)	224 (1983)	384 (3399)
			i = 10	59 (523)	141 (1248)	233 (2063)	443 (3921)
			i = 16	64 (567)	152 (1346)	278 (2461)	459 (4063)
			i = 28	71 (629)	165 (1461)	301 (2664)	524 (4638)
			i = 40	59 (523)	159 (1408)	264 (2337)	505 (4470)
Max. input speed	n_{1Max} rpm			6000	4500	4000	3000
Nominal speed	n_{1N} rpm			4000	4000	3500	3000
Ratios	i			4, 7, 10, 16, 28, 40			
Torsional backlash	j_t arcmin			< 3	< 3	< 3	< 3
Torsional rigidity	C_{t21} Nm/arcmin (in.lb/arcmin)	VDT	i = 40	17 (150)	50 (442)	113 (1000)	213 (1885)
		VDH	i = 40	8 (70)	28 (247)	78 (690)	153 (1354)
		VDS	i = 40	8 (70)	28 (247)	78 (690)	153 (1354)
Max. axial force	F_{2AMax} N (lbf)			5000 (1125)	8250 (1855)	13900 (3125)	19500 (4384)
Max. radial force	F_{2RMax} N (lbf)			3800 (855)	6000 (1349)	9000 (2024)	14000 (3148)
Max. tilting moment	M_{2KMax} Nm (in.lb)			409 (3620)	843 (7461)	1544 (13664)	3059 (27072)
Tilting rigidity	C_{2k} Nm/arcmin (in.lb/arcmin)	VDT		504 (4460)	603 (5337)	1178 (10425)	2309 (20435)
idling torque (n_1 = 3000 rpm)	T_{012} Nm (in.lb)		i = 4	1.28 (11)	2.07 (18)	3.63 (32)	9.75 (86)
			i = 7	1.23 (10)	1.9 (16)	3.48 (30)	8.06 (71)
			i = 10	1.18 (10)	1.83 (16)	3.37 (29)	7.41 (65)
			i = 16	1.09 (9.7)	1.73 (15)	3.15 (27)	6.72 (59)
			i = 28	0.98 (8.7)	1.6 (14)	3 (26)	5.79 (51)
			i = 40	0.89 (7.9)	1.44 (12)	2.76 (24)	4.99 (44)
Service life	L_h h			> 20000			
Efficiency [a] (n_1 = 3000 rpm)	η %		i = 4	96	96	97	97
			i = 7	94	95	96	96
			i = 10	93	94	94	95
			i = 16	90	91	92	92
			i = 28	83	85	86	87
			i = 40	78	81	81	84
Weight (without motor attachment parts)	m kg (lb)	VDT		8 (17)	16 (35)	30 (66)	64 (141)
		VDH		7 (15)	13 (28)	25 (55)	47 (103)
		VDS		8 (17)	14 (30)	27 (59)	57 (125)
Lubrication				Synthetic transmission oil			
Paint				None			
Permissible gearhead temperature	°C (°F)			-10 to +90 (14 to 194)			
Direction of rotation				See drawings			
Protection class				IP 64			
Operating noise (n_1 = 3000 rpm)	L_{PA} dB(A)			≤ 62	≤ 64	≤ 66	≤ 70

[a] See the dimensioning factors in the Chapter "Information".

Moments of inertia J_1 [kgcm²] (10^{-3} in.lb.s²) relating to the drive

Size	i	VDT	VDH	VDS
050	4	1.27 (1.12)	1.00 (0.89)	0.97 (0.86)
	7	0.75 (0.66)	0.65 (0.58)	0.65 (0.58)
	10	0.65 (0.58)	0.60 (0.53)	0.59 (0.52)
	16	0.59 (0.52)	0.57 (0.50)	0.57 (0.50)
	28	0.55 (0.49)	0.55 (0.49)	0.55 (0.49)
	40	0.61 (0.54)	0.61 (0.54)	0.61 (0.54)

Size	i	VDT	VDH	VDS
063	4	3.73 (3.30)	3.03 (2.68)	3.03 (2.68)
	7	2.43 (2.15)	2.13 (1.89)	2.23 (1.97)
	10	2.03 (1.80)	1.93 (1.71)	1.93 (1.71)
	16	1.93 (1.71)	1.83 (1.62)	1.83 (1.62)
	28	1.80 (1.59)	1.79 (1.58)	1.79 (1.58)
	40	1.79 (1.58)	1.78 (1.58)	1.79 (1.58)

Size	i	VDT	VDH	VDS
080	4	13.40 (11.86)	9.52 (8.43)	10.72 (9.49)
	7	8.32 (7.36)	7.32 (6.48)	7.42 (6.57)
	10	8.02 (7.10)	7.62 (6.74)	7.62 (6.74)
	16	6.52 (5.77)	6.32 (5.59)	6.32 (5.59)
	28	6.12 (5.42)	6.12 (5.42)	6.12 (5.42)
	40	7.02 (6.21)	7.02 (6.21)	7.02 (6.21)

Size	i	VDT	VDH	VDS
100	4	62.40 (55.23)	49.60 (43.90)	49.50 (43.81)
	7	44.70 (39.56)	40.60 (35.93)	40.50 (35.85)
	10	40.30 (35.67)	38.40 (33.99)	38.40 (33.99)
	16	40.70 (36.02)	39.90 (35.31)	39.90 (35.31)
	28	37.00 (32.75)	36.70 (32.48)	36.70 (32.48)
	40	38.70 (34.25)	38.60 (34.16)	38.60 (34.16)

VDT version

WITTENSTEIN

Dimensions [mm]

Size	050	063	080	100
a	50	63	80	100
d	0.03	0.03	0.03	0.04
c	G 1/2	G 1/2	G 3/4	G 1
B0	15	18	20	20
D1 H7	31.5	40	50	80
D2	50	63	80	125
D3 h7	63	80	100	160
D5 h7	90	110	140	200
D6	109	135	168	233
D7	124	154	202	257
D8	M6	M6	M8	M10
D9 H7	6	6	8	10
D10 F7	19	28	35	48
D11	30	40.5	50.5	70
D12	M5	M5	M6	M8
L1	132.5	146.5	190.5	247.5
L2	10	12	15	20
L3	7	7	7	9
L4	30	29	38	50
L5	10	10.5	12.5	15.5
L6 min./max. [a]	23/40	30/50	32/60	45/82
L8	8.5	10	12.5	13
L9	7	7	7	10
L12	8.5	8.5	12	15.5
□ L13 [a]	80	100	140	190
L17	6	6	6	8
L18	12	17	19	29
L21 [a]	22	28	30.5	37.5
L22 [a]	6.7	7.2	5.7	9.8
L31	132.5	145.5	190.5	246.5
L32	52.5	60	77.5	100
V1 [a]	220	253.5	325	402.5
V2	162.5	203	260	335
V3	100	115	150	195
V4	70	80	110	132.5
V5	52.5	62.5	90	110
V6	65	83	115	157.5
V7	42.5	55	70	97.5
V8	82.5	105.5	142.5	185
V9	60	77.5	97.5	125
V10	70	87.5	107.5	137.5
V11	M8	M10	M12	M12
V12	13.5	17	19.5	19.5
V13	11	11	11	14
V14	18	18	18	20
V15	11	11	11	13
V16	198	225.5	294.5	365
V17	98	110.5	152	194
V18	85	100	127.5	152.5
V19	11	11	11	14
V20	10	7	10	20
V21	113	125.5	167	212.5
V22	40	45	60	82.5

[a] The dimensions depend on the motor

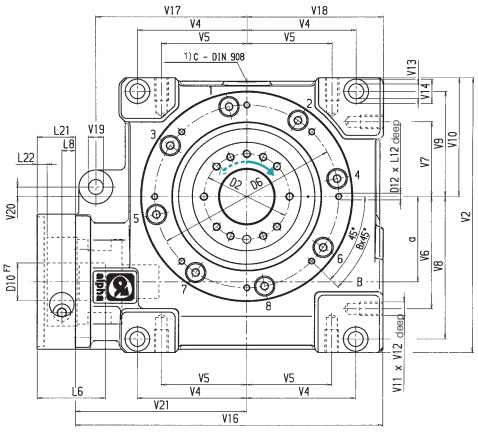

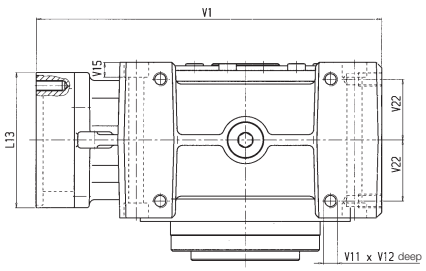

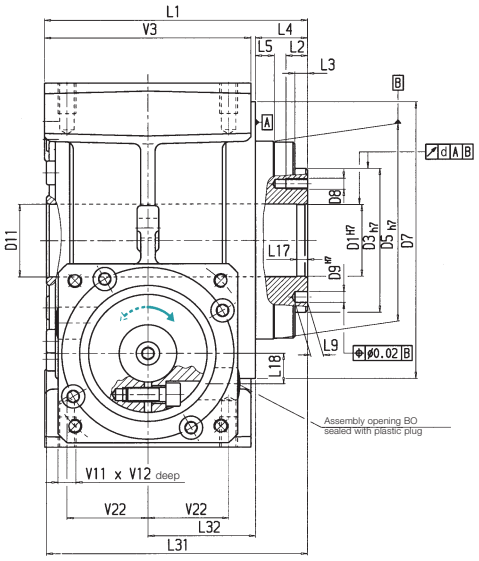

VDT 080/100

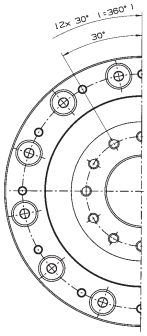

VDT 063

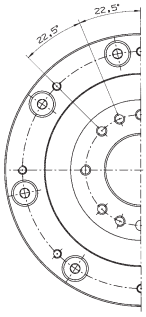

VDT 050

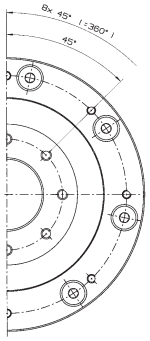

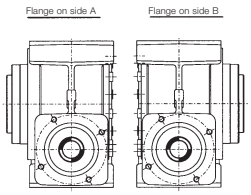

Identical arrows indicate dependence on the direction of rotation.

[1] Oil filler and drain plug



VDH version Hollow shaft, keywayed

Dimensions [mm]

Size	050	063	080	100
a	50	63	80	100
c	G 1/2	G 1/2	G 3/4	G 1
B0	15	18	20	20
D1 H6	25	28	36	48
D2	25.5	28.5	36.5	49
D7	M12	M12	M16	M20
D8	M10	M10	M12	M16
D10 F7	19	28	35	48
L1	100	113	150	193
L3	50	56.5	75	96.5
L4	30	37.5	45	64
L6 min./max. [a]	23/40	30/50	32/60	45/82
L8	8.5	10	12.5	13
□ L13 [a]	80	100	140	190
L16 P8	8	8	10	14
L17	28.3	31.3	39.3	51.8
L18	12	17	19	29
L21 [a]	22	28	30.5	37.5
L22 [a]	6.7	7.2	5.7	9.8
L30	84.5	97.2	130	169.9
L31 max [b]	77	89	119	159
L32	7	8	10	11
V1 [a]	220	253.5	325	402.5
V2	162.5	203	260	335
V3	100	115	150	195
V4	70	80	110	132.5
V5	52.5	62.5	90	110
V6	65	83	115	157.5
V7	42.5	55	70	97.5
V8	82.5	105.5	142.5	185
V9	60	77.5	97.5	125
V10	70	87.5	107.5	137.5
V11	M8	M10	M12	M12
V12	13.5	17	19.5	19.5
V13	11	11	11	14
V14	18	18	18	20
V15	11	11	11	13
V16	198	225.5	294.5	365
V17	98	110.5	152	194
V18	85	100	127.5	152.5
V19	11	11	11	14
V20	10	7	10	20
V21	113	125.5	167	212.5
V22	40	45	60	82.5

[a] The dimensions depend on the motor
[b] Only valid when forcing disc is used

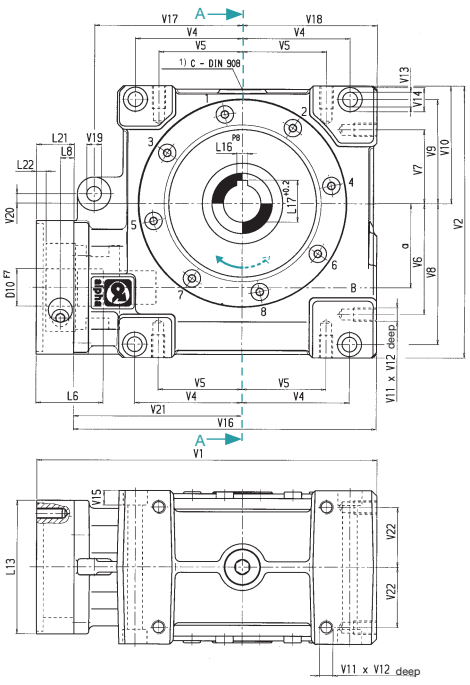

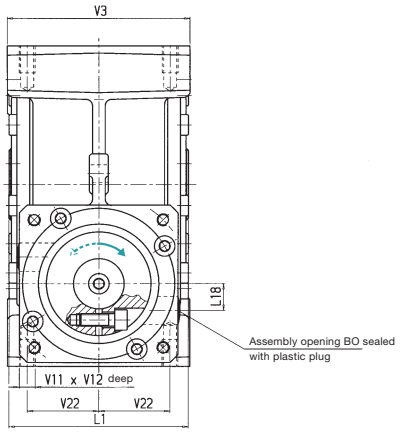

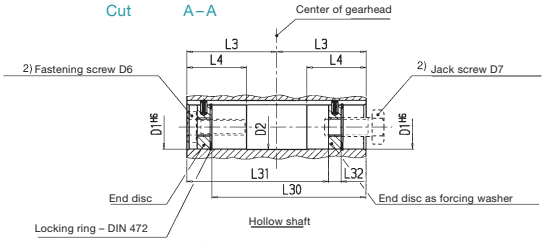

Identical arrows indicate dependence on the direction of rotation.
[1] Oil filler and drain plug
[2] not included in the scope of delivery
Tolerance h6 for mounted shaft.

VDH version Hollow shaft, smooth

WITTENSTEIN

Dimensions [mm]

Size	050	063	080	100
a	50	63	80	100
c	G 1/2	G 1/2	G 3/4	G 1
B0	15	18	20	20
D1 H6	25	28	36	48
D2 h8	30	36	50	62
D3	25.5	28.5	36.5	49
D10 F7	19	28	35	48
DS	60	72	90	110
H	24	27.5	31.5	34.5
L1	137	153	200	253
L2	18.5	20	25	25
L3	68.5	76.5	100	126.5
L4	20	21	26	28
L6 min./max. [a]	23/40	30/50	32/60	45/82
L8	8.5	10	12.5	13
□ L13 [a]	80	100	140	190
L18	12	17	19	29
L21 [a]	22	28	30.5	37.5
L22 [a]	6.7	7.2	5.78	9.8
V1 [a]	220	253.5	325	402.5
V2	162.5	203	260	335
V3	100	115	150	195
V4	70	80	110	132.5
V5	52.5	62.5	90	110
V6	65	83	115	157.5
V7	42.5	55	70	97.5
V8	82.5	105.5	142.5	185
V9	60	77.5	97.5	125
V10	70	87.5	107.5	137.5
V11	M8	M10	M12	M12
V12	13.5	17	19.5	19.5
V13	11	11	11	14
V14	18	18	18	20
V15	11	11	11	13
V16	198	225.5	294.5	365
V17	98	110.5	152	194
V18	85	100	127.5	152.5
V19	11	11	11	14
V20	10	7	10	20
V21	113	125.5	167	212.5
V22	40	45	60	82.5

[a] The dimensions depend on the motor

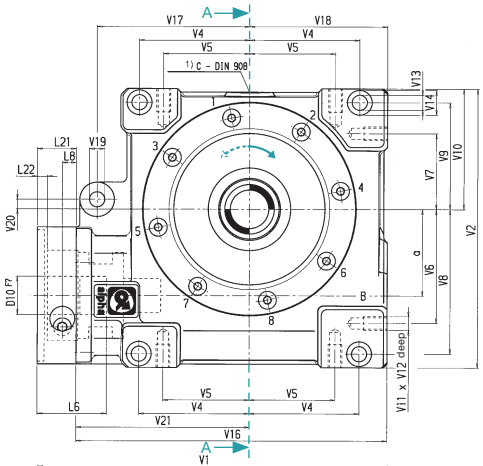

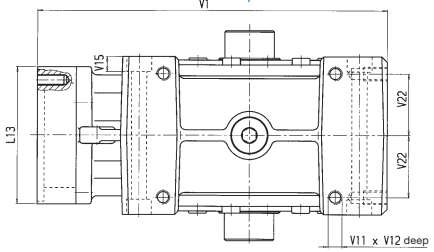

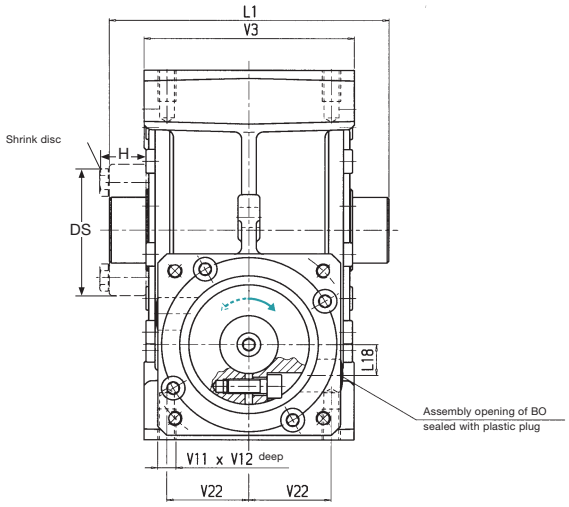

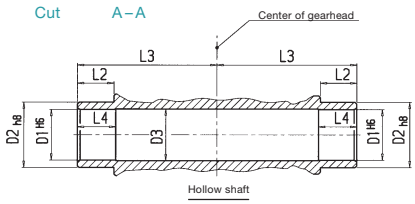

Identical arrows indicate dependence on the direction of rotation.
[1] Oil filler and drain plug
Tolerance h6 for mounted shaft.

VDS version

Dimensions [mm]

Size	050	063	080	100
a	50	63	80	100
c	G 1/2	G 1/2	G 3/4	G 1
B0	15	18	20	20
D1 g6	70	90	130	160
D2	30	40	55	65
D4	M6	M8	M10	M12
D5	85	120	165	215
D7	124	154	202	257
D10 F7	19	28	35	48
L1 smooth/keywayed	156	198.5	265	306.5
L1 involute	146	166.5	223	266
L3	14	18	23	27
L4	10	13	15	23
L6 min./max. [a]	23/40	30/50	32/60	45/82
L8	8.5	10	12.5	13
L12	2	2	3	3
□ L13 [a]	80	100	140	190
L18	12	17	19	29
L21 [a]	22	28	30.5	37.5
L22 [a]	6.7	7.2	5.7	9.8
L32	56	65	85	100
V1 [a]	220	253.5	325	402.5
V2	162.5	203	260	335
V3	100	115	150	195
V4	70	80	110	132.5
V5	52.5	62.5	90	110
V6	65	83	115	157.5
V7	42.5	55	70	97.5
V8	82.5	105.5	142.5	185
V9	60	77.5	97.5	125
V10	70	87.5	107.5	137.5
V11	M8	M10	M12	M12
V12	13.5	17	19.5	19.5
V13	11	11	11	14
V14	18	18	18	20
V15	11	11	11	13
V16	198	225.5	294.5	365
V17	98	110.5	152	194
V18	85	100	127.5	152.5
V19	11	11	11	14
V20	10	7	10	20
V21	113	125.5	167	212.5
V22	40	45	60	82.5

[a] The dimensions depend on the motor

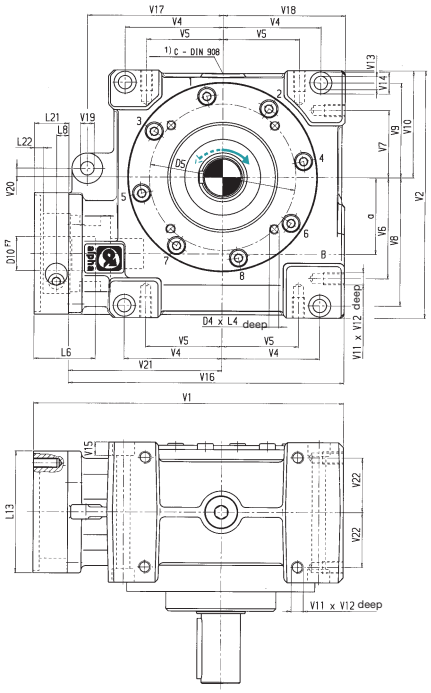

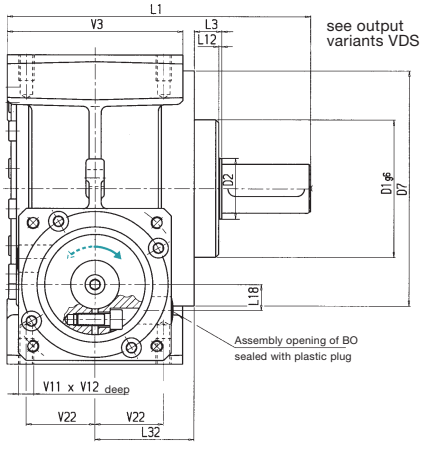

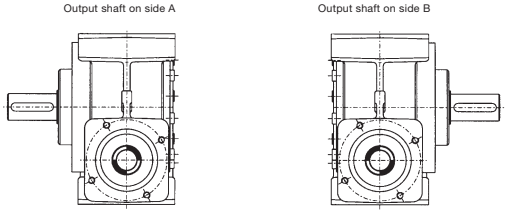

Identical arrows indicate dependence on the direction of rotation.

[1] Oil filler and drain plug

Smooth output shaft [mm]

Size		VDS 050	VDS 063	VDS 080	VDS 100
Output shaft dia.	D3 k6	22	32	40	55
Centering bore hole	DR	M8	M12	M16	M20
Output shaft length	L2	36	58	82	82
Thread depth, centering bore hole	t	19	28	36	42

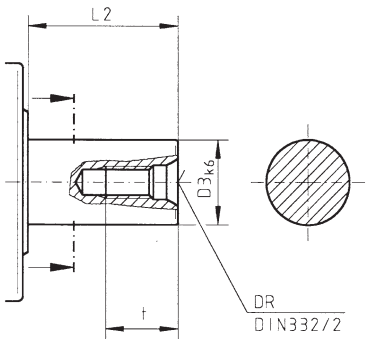

Keywayed output shaft [mm]

Size		VDS 050	VDS 063	VDS 080	VDS 100
Output shaft dia.	D3 k6	22	32	40	55
Centering bore hole	DR	M8	M12	M16	M20
Key	E	Key as per DIN 6885, sheet 1, form A			
Output shaft length	L2	36	58	82	82
Key length	L14	32	50	70	70
Position of key	L15	2	4	5	6
Key width	L16 h9	6	10	12	16
Output shaft with key	L17	24.5	35	43	59
Thread depth, centering bore hole	t	19	28	36	42

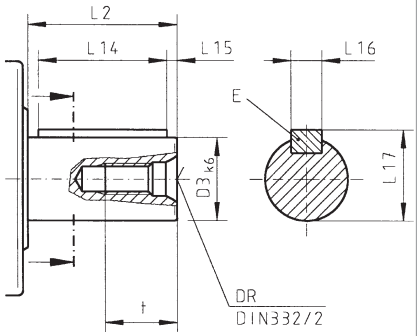

Output shaft with **involute gearing** as per DIN 5480 [mm]

Size		VDS 050	VDS 063	VDS 080	VDS 100
Designation as per DIN 5480		22 x 1.25 x 30 x 16 x 6m	32 x 1.25 x 30 x 24 x 6m	40 x 2 x 30 x 18 x 6m	55 x 2 x 30 x 26 x 6m
Output shaft dia.	D3 k6	22	32	40	55
Centering bore hole	DR	M8	M12	M16	M20
Lead angle		30°	30°	30°	30°
Output shaft length	L2	26	26	40	41.5
Effective length, involute	L30	15	15	20	21.5
Involute length	L31	22.5	23	32	33.5
Module	m	1.25	1.25	2	2
Thread depth	t	19	28	36	42
Shaft to DIN 5480	W 6m	22	32	40	55
Number of teeth	z	16	24	18	26
Fit combination 7H/6m yields the following face clearances:					
min. face clearance	$j_{t\,min}$	-0.027	-0.033	-0.033	-0.037
max. face clearance	$j_{t\,max}$	0.021	0.028	0.028	0.031
With $j_{t\,min}$, the pinion must be heated to approx. +80°C.					

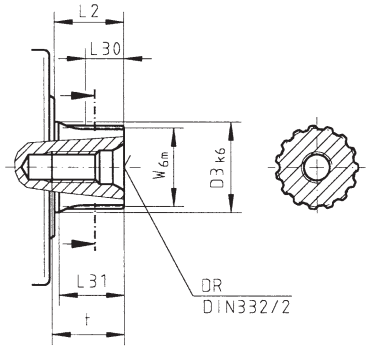

We recommend using smooth output shafts during reverse operation and with high gearhead loads.

Putting you one step ahead of the rest: Mechanical systems by WITTENSTEIN alpha

More precise, more individual, more compact – mechanical systems by WITTENSTEIN alpha and numerous special applications have opened up a whole new range of possibilities. Maximizing performance. Achieving more. Progressing faster. Solution-oriented, individualized systems, compatible with all WITTENSTEIN alpha gearheads: alpha Rack & Pinion System, alpha IQ and couplings by WITTENSTEIN alpha.
Optimizing your company's plans for the future.

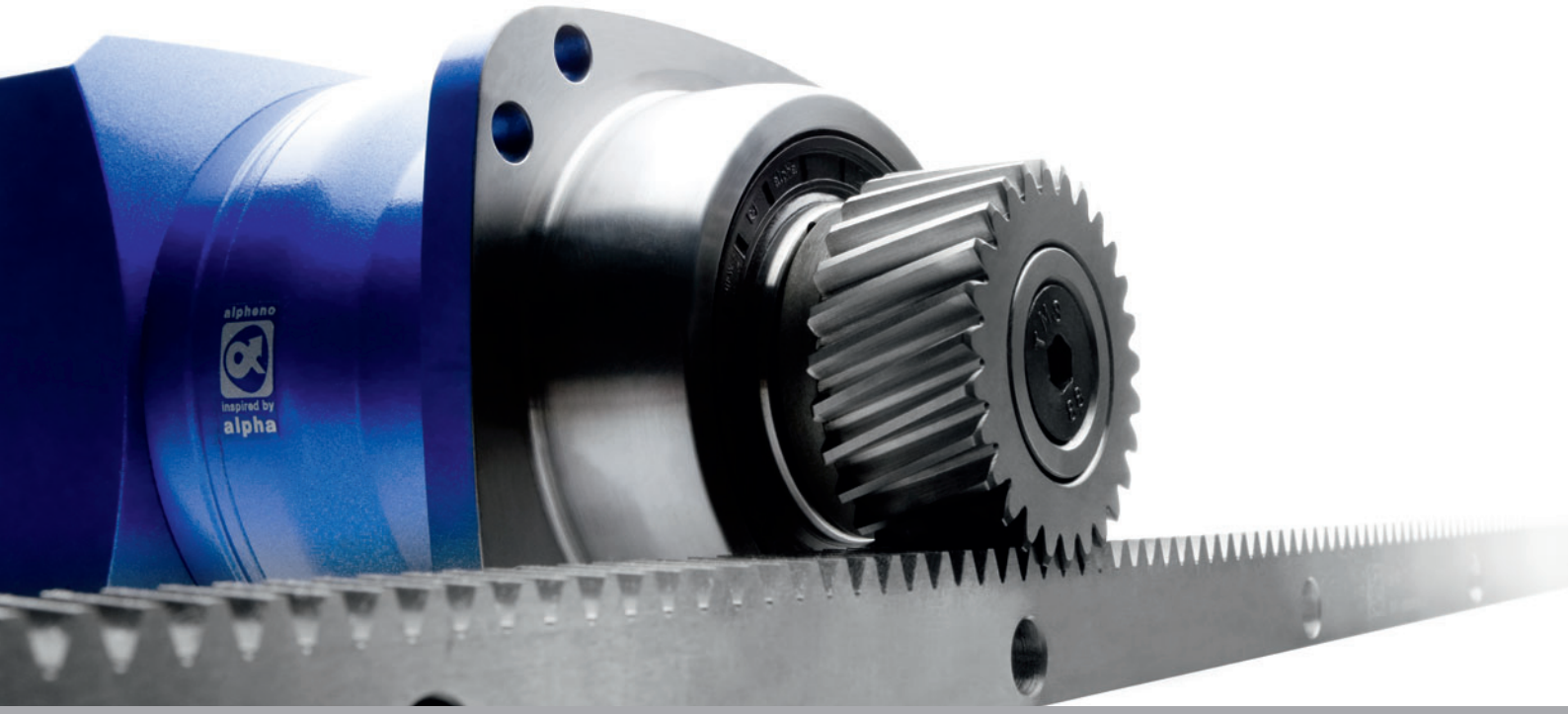

Mechanical systems

alpha Rack & Pinion System

Recognizing individuality. Benefiting from experience. Achieving harmony.
We are more than familiar with the combination of gearhead, motor and pinion. We are adding extra depth to our experience by developing mechanical systems with an outstanding capacity for integration. For maximum machine efficiency. Outstanding dynamics. Compact dimensions. Individual solutions that help bring you one step closer to achieving your ambitious goals.







alpha IQ

Achieving compatibility. Utilizing intelligence. Increasing efficiency.
A gearhead and measuring instrument in one system, fully compatible with all WITTENSTEIN alpha gearheads, continuous realtime data acquisition during operation – alpha IQ, the intelligent planetary gearhead. For continuous data acquisition and drive component monitoring, for increasing productivity and process stability. Innovative engineers are not the only ones getting excited about this system. Operating companies will have something to write home about too.

Couplings

Redefining movement. Refining transmission processes. Crossing boundaries.
For WITTENSTEIN alpha couplings, freedom of innovation means: A maximum acceleration torque of 10,000 Nm, disengagement within 1–3 ms and a belt tension of 100 to 12,000 N combined with absolute torsional rigidity, simple installation, a self-adjustment function and no maintenance. High-tech components for the harmonious transmission of power and movement – in all applications where improved performance means forward progress.



alpha Rack & Pinion System – a perfect combination of gearhead, pinion and rack – ranging from low-cost to high-end systems

Details

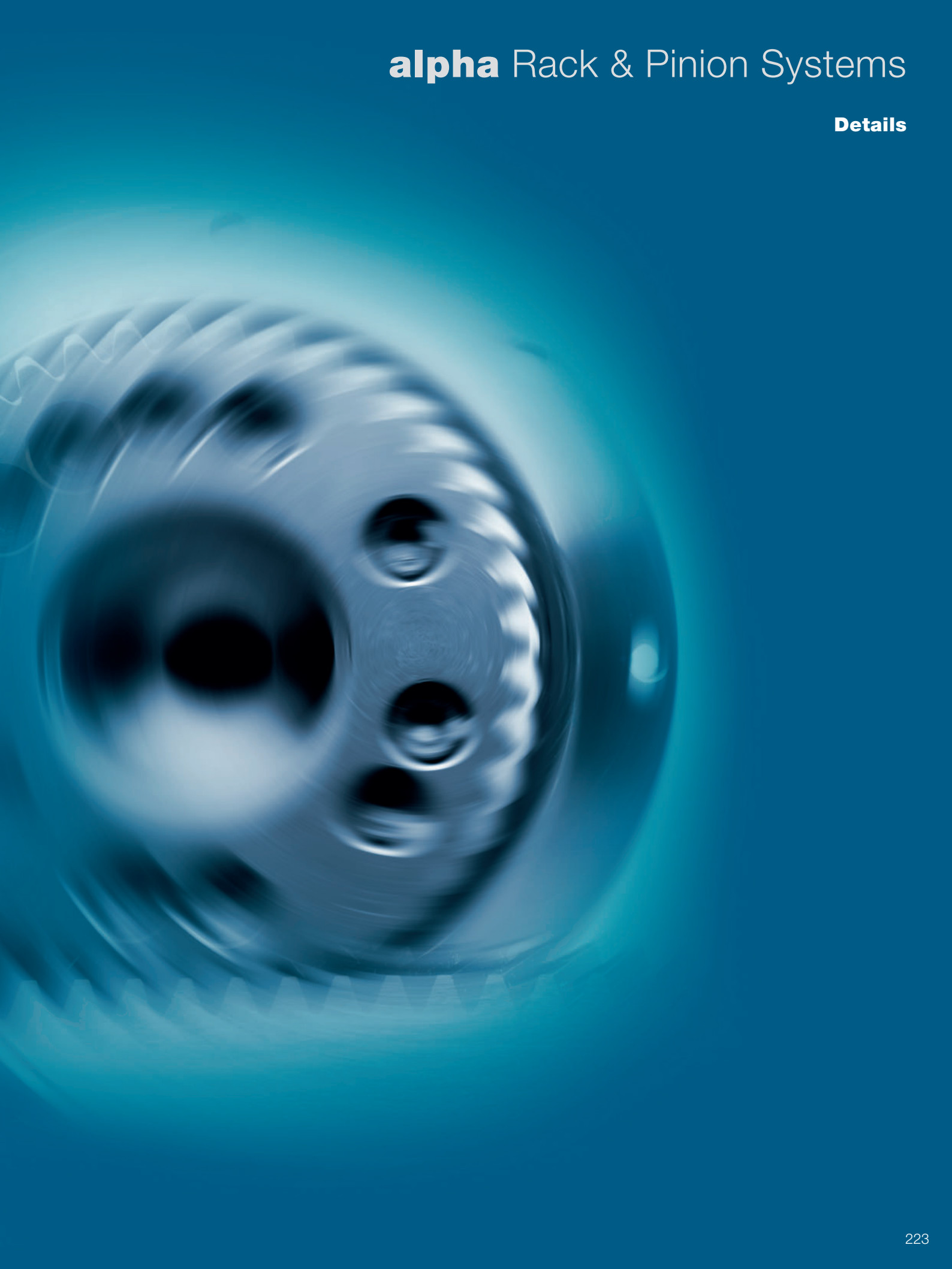

alpha Rack & Pinion System –
a **perfect symbiosis** of **state-of-the-art technology** and **many years of experience**.
alpha is the next generation of rack and pinion systems. Our specialist knowledge extends from the separate coupling of gearhead, motor, pinion and rack to complete system solutions.

The alternative – not only for long distances

Rack and pinion combinations do not only excel in applications involving long, precise movement paths.
The WITTENSTEIN alpha technology achieves an excellent degree of precision using an **electronic tensioning** system. The **high-precision manufacture** of individual components is an essential aspect here because manufacturers and users must be able to rely on the installed drives to achieve the level of accuracy required.

We offer the **highest levels of** precision, dynamics and rigidity as well as an extended service life that more than satisfy the demanding requirements of machine and system manufacturers. The result of our efforts is maximum performance across the board. WITTENSTEIN alpha has managed to move the old established system of rack and pinion **back into the fast lane**.



Always there for you.

If you are striving to achieve your objectives quickly and implement solutions efficiently and individually, then WITTENSTEIN alpha is the perfect partner for you.

Make a decision in favor of world-class technology that will give your customers a leading edge and help further consolidate your partnership together.

The **systems** and **applications**

Machine precision *

1 µm

Master/Slave: TP System output
with Premium Class+ pinion and Premium Class rack

5 µm

The right gearhead, rack and pinion **for every application** – from low-cost to high-end solutions. The positioning accuracy required in the application, the existing measuring system and the machine design essentially determine the configuration of linear systems and system combinations.

TP System output
with Premium Class+ pinion and Premium Class rack

20 µm

TP output
with Premium Class RTP pinion and Premium/Smart Class rack

50 µm

A real powerhouse with **a compact design**. Constant **rigidity** and outstanding **dynamics**. Easy to operate, quickly becomes indispensable. **Customized** to suit your specific application areas.

SP system output
with Premium Class+ pinion and Premium/Smart Class rack

100 µm

SP involute output
with Standard Class RSP pinion and Value/Smart Class rack

200 µm

Key output
with Value Class pinion and Value/Smart Class rack

>300 µm

* depending on other components.

Competent consultation

Staff at our **Technical Office** will be glad to answer any questions you may have about alpha Rack & Pinion Systems and your specific configurations. Give us a call!



HSC (High Speed Cutting) portal milling machines
Source: F. Zimmermann GmbH



Profile machining centers
Source: Handtmann A-Punkt Automation GmbH



Laser machines
Source: TRUMPF Werkzeugmaschinen GmbH + Co. KG

Precision System

Eroding machines · Grinding machines · HSC portal milling machines · Turning machines · Machining centers · Boring machines · Laser machines · Punching machines

Measuring system

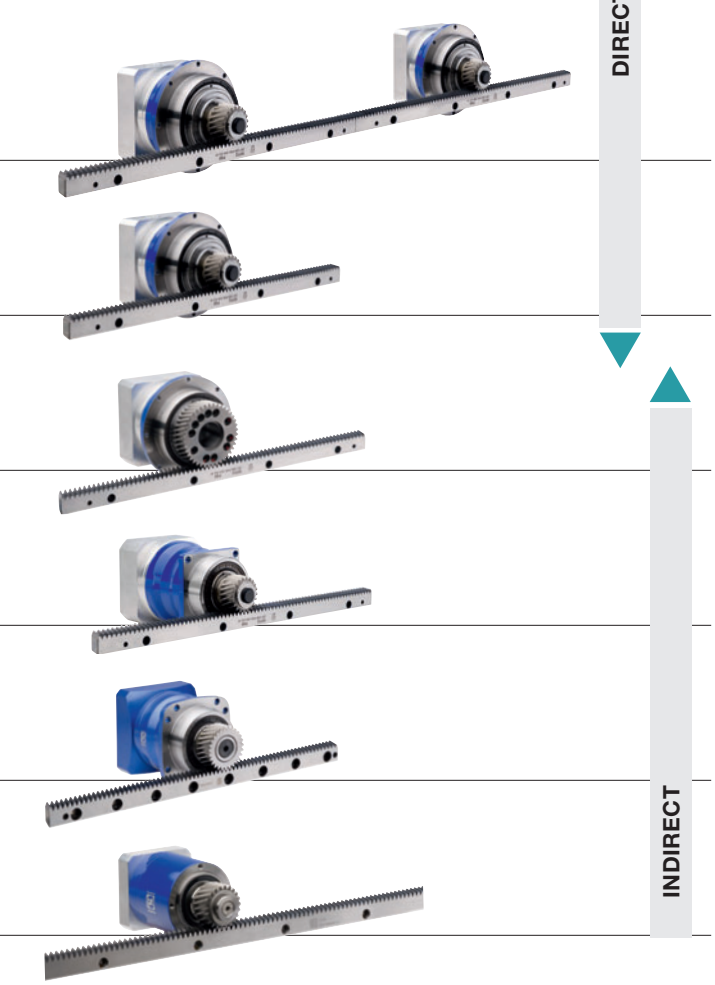

Precision+ System/ Precision System

P

for demanding requirements with regard to dynamics and accuracy in high-end applications.

Smart System

S

for positioning options with **more design freedom** in flexible applications.

Economy+ System/ Economy System

E

for standard linear applications in mid-range/ low-cost applications.

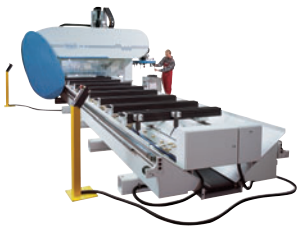

Wood, plastic/composite machining centers
Source: MAKA – Max Mayer Maschinenbau GmbH © MAKA



Gas cutting machines
Source: LIND GmbH Industrial Equipment



Robot arms in automation engineering
Source: MOTOMAN Robotics Europe AB

Smart System

Economy System

Water jet cutting machines · CNC wood/plastic processing machines · Gas cutting machines · Pipe bending machines · Foam cutting machines · Automation engineering

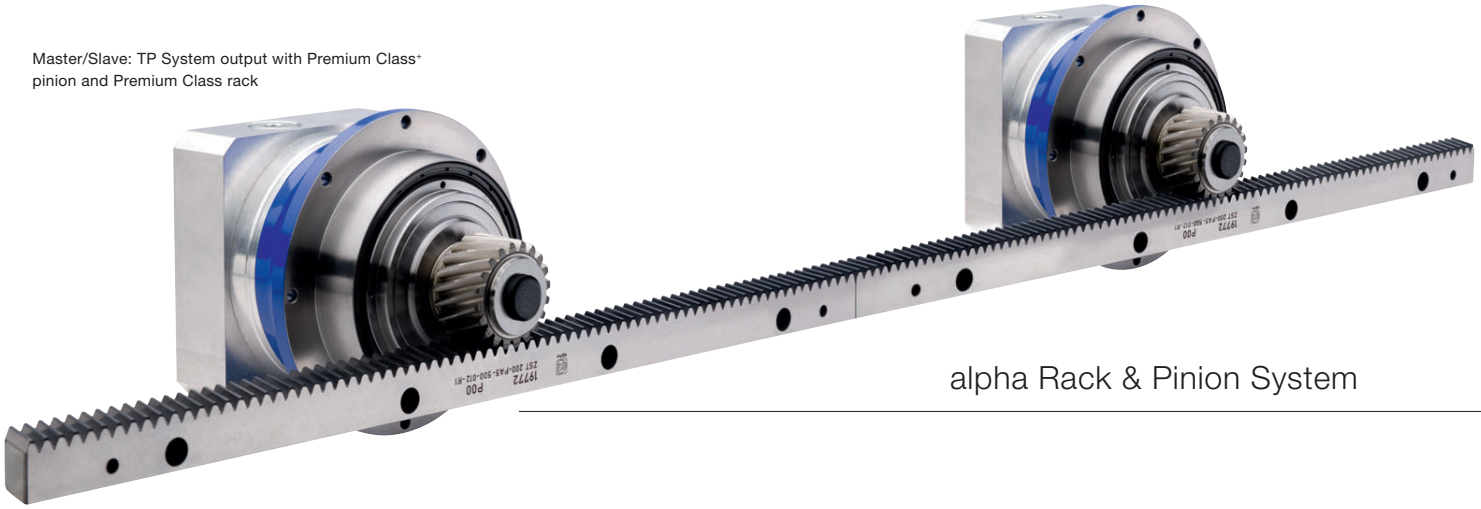

Master/Slave: TP System output with Premium Class+ pinion and Premium Class rack

alpha Rack & Pinion System – **the benefits for you**

Dynamic

- Maximum movement speed and acceleration with low moments of inertia.
- Extremely good control characteristics due to constant linear rigidity along the entire movement path.

Precise

- New drive solutions with unique true running accuracy.
- Maximum positioning accuracy due to precision alignment of components.

Efficient

- Effortless operation.
- Minimal mounting space and high power density.
- Enormous savings potential due to high level of energy efficiency.

The right gearhead, rack and pinion for every application.

A direct comparison

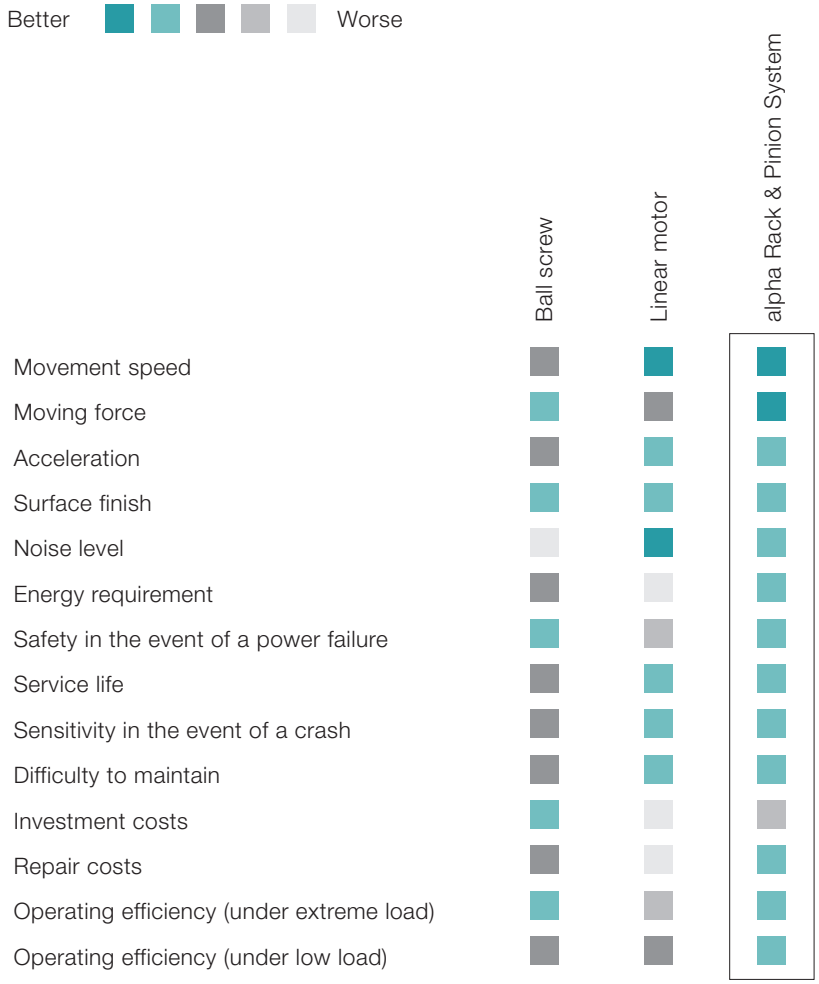

The comparison is based on typical processes involved in machining large workpieces and machines with long movement paths.

In detail

Feel the dynamics.
Experience the precision.
Maximize efficiency.

Solution-oriented concepts, sophisticated development phases and perfect results. Helping you become a top performer.

alpha Rack & Pinion Systems will optimize your applications. Find out for yourself. Help your company **take giant strides towards achieving its goals.**

Three classes of rack – **unlimited possibilities**

The correct rack is an essential component in realizing your machine concepts. WITTENSTEIN alpha offers three classes of rack Premium Class, Value Class and Smart Class to find the right solution for your application requirements.

Have the freedom to implement your ideas!

Precision System

Premium Class

Solution for **extremely dynamic, precision high-end** applications.

For greater precision: linear and gantry sorting possible.
Contact us!

Standard installation concept: permanent connection to mounting edge

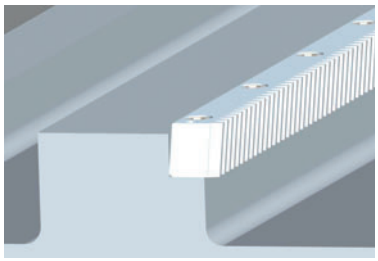

Economy System

Value Class

Solution for **mid-range and economy** applications.



New feature: free connection option

Smart System

Smart Class

The flexible rack for applications **with no available mounting edge in the economy to mid-range** sector.

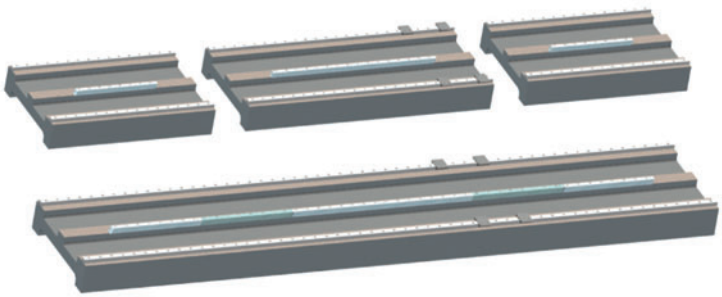

The flexible modular assembly concept makes the Smart Class rack a versatile all-rounder.

New: free connection without mounting edge

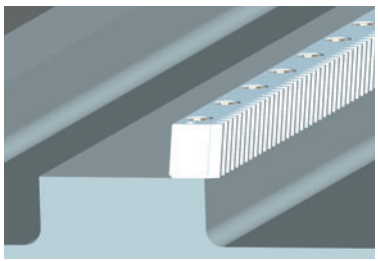

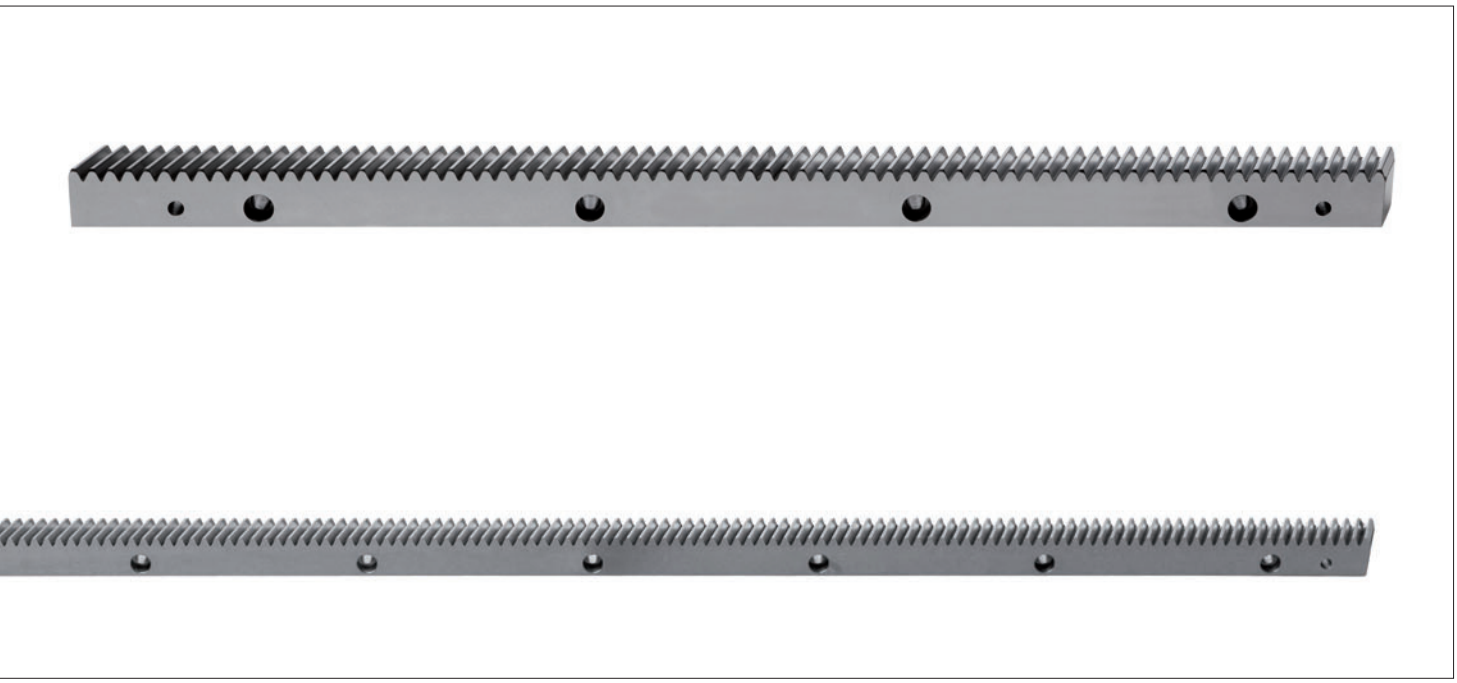

Extremely flexible concept

Free connection concept:
The absence of the mounting edge allows simple and uncomplicated mounting of the rack parallel to the machine guide.

Modular machine concept:
The 60 mm hole pattern and length of 480 mm **are compatible with the hole patterns on linear guides** produced by well-known manufacturers and enable the implementation of modular machine concepts.

Clearing the way for **unlimited movement paths.**



Premium Class rack

Module	p_t	L	z	a [a)]	a_1	B	d	d_1 [b)]	D	$f^{+0.5}$	h	h_B	h_D	H	l	l_1	L_1
2	6.67	500	75	31.7	436.6	24	7	5.7	11	2	22	8	7	24	62.5	125.0	8.5
2	6.67	333	50	31.7	269.9	24	7	5.7	11	2	22	8	7	24	62.5	104.2	8.5
2	6.67	167	25	31.7	103.3	24	7	5.7	11	2	22	8	7	24	62.5	41.7	8.5
3	10	500	50	35.0	430	29	10	7.7	15	2	26	9	9	29	62.5	125.0	10.3
3	10	250	25	35.0	180	29	10	7.7	15	2	26	9	9	29	62.5	125.0	10.3
4	13.33	507	38	18.3	460	39	12	9.7	18	3	35	12	11	39	62.5	125.0 [c)]	13.8
5	16.67	500	30	37.5	425	49	14	11.7	20	3	34	12	13	39	62.5	125.0	17.4
6	20	500	25	37.5	425	59	18	15.7	26	3	43	16	17	49	62.5	125.0	20.9

All dimensions in [mm]
Cumulative pitch error Fp: 12 µm for m2 and m3 (250 mm in length); Fp: 15 µm for m > 2
Single pitch error fp: 3 µm
[b)] Recommended tolerance dimension: $6^{H7}/8^{H7}/10^{H7}/12^{H7}/16^{H7}$
[c)] Hole spacing between two racks on module 4 is 131.67 mm.

p_t = Reference circle pitch
z = Number of teeth
m = Module

Value Class rack

Module	p_t	L	z	a [a)]	a_1	B	d	d_1 [b)]	D	$f^{+0.5}$	h	h_B	h_D	H	l	l_1	L_1
2	6.67	1000	150	31.7	936.6	24	7	5.7	11	2	22	8	7	24	62.5	125	8.5
3	10	1000	100	35	930	29	10	7.7	15	2	26	9	9	29	62.5	125	10.3
4	13.33	1000	75	33.3	933.4	39	10	7.7	15	3	35	12	9	39	62.5	125	13.8
5	16.67	1000	60	37.5	925	49	14	11.7	20	3	34	12	13	39	62.5	125	17.4
6	20	1000	50	37.5	925	59	18	15.7	26	3	43	16	17	49	62.5	125	20.9

All dimensions in [mm]
Cumulative pitch error Fp: 35 µm/1000 mm
Single pitch error fp: 8 µm; 10 µm at m5 and m6
[b)] Recommended tolerance dimension: $6^{H7}/8^{H7}/10^{H7}/12^{H7}/16^{H7}$

p_t = Reference circle pitch
z = Number of teeth
m = Module

New feature: free connection option

Smart Class rack

Module	p_t	L	z	a [a)]	a_1	B	d	d_1 [b)]	D	$f^{+0.5}$	h	h_B	h_D	H	l	l_1	L_1
2	6.67	480	72	12	453	24	9	7.7	15	2	2	15.5	8.5	24.2	30	60	8.5
3	10	480	48	10.2	453	29	11	7.7	17	2	3	19.5	10.5	29.2	28.2	60	10.3
4	13.33	480	36	7	452	39	14	9.7	20	3	4	28	13	39.2	23	60	13.8

All dimensions in [mm]
Cumulative pitch error Fp: 30 µm/500 mm
Single pitch error fp: 6 µm
[b)] Recommended tolerance dimension: 8^{H7}, 10^{H7}

p_t = Reference pitch circle
z = Number of teeth
m = Module

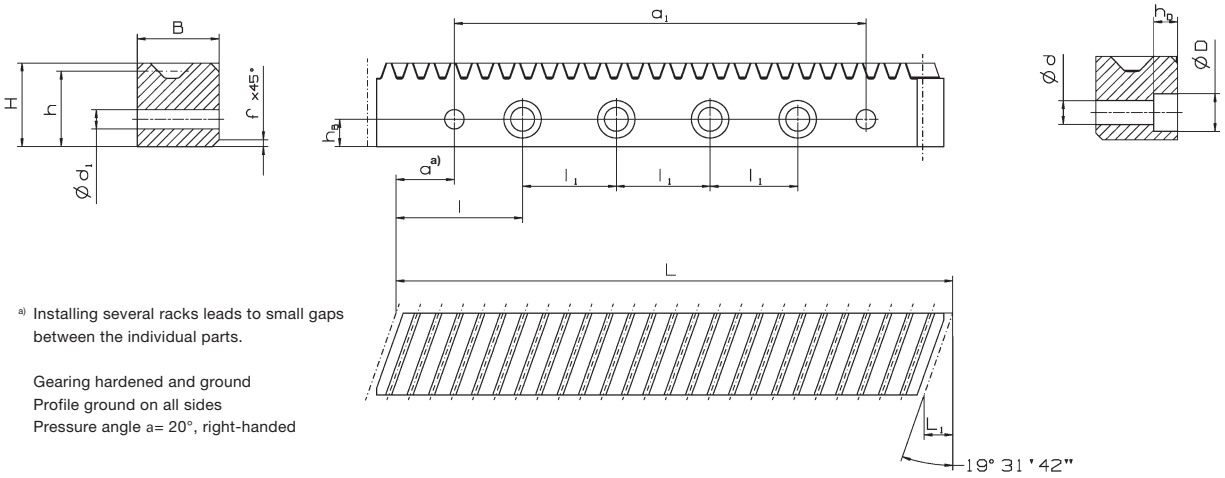

a) Installing several racks leads to small gaps between the individual parts.

Gearing hardened and ground
Profile ground on all sides
Pressure angle a= 20°, right-handed

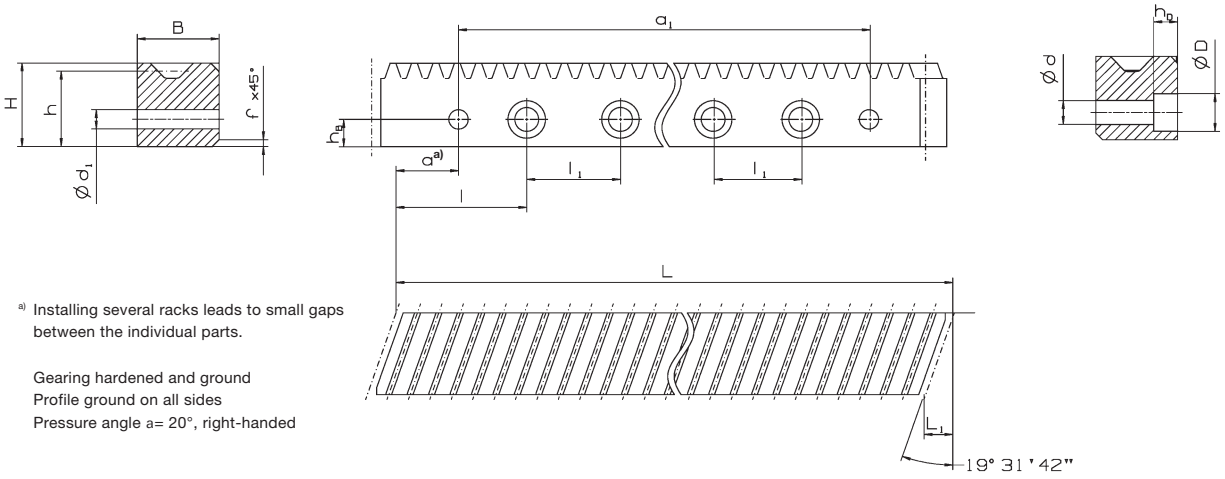

a) Installing several racks leads to small gaps between the individual parts.

Gearing hardened and ground
Profile ground on all sides
Pressure angle a= 20°, right-handed

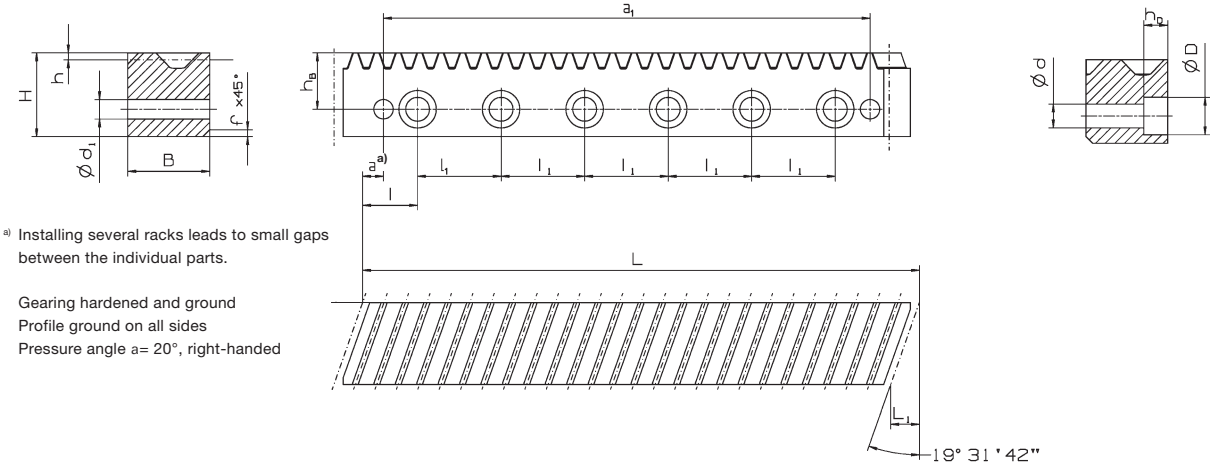

a) Installing several racks leads to small gaps between the individual parts.

Gearing hardened and ground
Profile ground on all sides
Pressure angle a= 20°, right-handed

Premium Class+ pinion on TP system output with Premium Class rack

TP System output	Module	z	A-PC ±0.3 a)	b	B	d_a	d_w	$D1_{h7}$	D6	D7	D14	L7	L12	L13	L14	L15	L16
TP+ 010	2	20	44.0	26	24	48.3	42.441	90	109	118	5.5	7	71.0	50.5	20.5	8.5	38.5
TP+ 025 (MA, MF)	2	20	44.0	26	24	48.3	42.441	110	135	145	5.5	8	73.5	53.0	24.0	12.0	41.0
	2	40	64.4	26	24	89.2	84.883						73.5	53.0	24.0	12.0	41.0
	3	20	59.0	31	29	72.3	63.662						76.0	52.5	23.5	9.0	38.0
TP+ 050 (MA, MF)	2	40	64.4	26	24	89.2	84.883	140	168	179	6.6	10	87.0	66.5	28.5	16.5	54.5
	3	20	59.0	31	29	72.3	63.662						89.5	66.0	28.0	13.5	51.5
	3	34	80.1	31	29	114.5	108.226						90.5	66.0	28.0	13.5	51.5
	4	20	78.2	41	39	94.8	84.882						97.0	67.5	29.5	10.0	48.0
TP+ 110 (MA, MF)	3	34	80.1	31	29	114.5	108.226	200	233	247	9	12	106.0	81.5	31.5	17.0	67.0
	4	20	78.2	41	39	94.8	84.882						112.5	83.0	33.0	13.5	63.5
	4	30	98.7	41	39	135.6	127.324						112.5	83.0	33.0	13.5	63.5
	5	19	86.4	51	49	115.1	100.798						120.0	85.0	35.0	10.5	60.5
TP 300 (MA, MF)	4	30	98.7	41	39	135.6	127.324	255	280	300	13.5	18	131.5	102.0	36.0	16.5	82.5
	5	19	86.4	51	49	115.1	100.798						139.0	104.0	38.0	13.5	79.5
	5	30	113.6	51	49	169.4	159.155						135.0	104.0	38.0	13.5	79.5
	6	19	105.9	61	59	138.0	120.958						142.5	106.0	40.0	10.5	76.5
TP 500 (MA, MF)	5	30	113.6	51	49	169.4	159.155	285	310	330	13.5	20	147.5	116.5	41.5	17.0	92.0
	6	19	105.9	61	59	138.0	120.958						155.0	118.5	43.5	14.0	89.0
	6	28	132.1	61	59	190.5	178.254						154.0	118.5	43.5	14.0	89.0

All dimensions in [mm]
a) please contact us for precise dimensions; align mechanism recommended (alignment dimension ±0.3 mm)

z = Number of teeth
d_a = Tip diameter
d_w = Pitch diameter

MA = HIGH TORQUE
MF = Standard

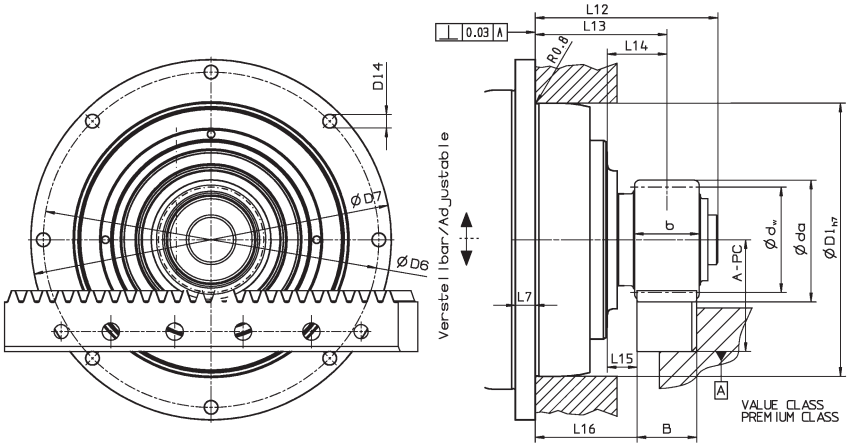

True running accuracy < 10 µm (m2)

TP+ gearhead with **Premium Class+ pinion** on **TP system output** with **Premium Class rack**

· Technical data for the smallest available ratio

	Module	z	F_{2T} [N] (lb_f) MF i = 4	F_{2T} [N] (lb_f) MA i = 22	T_{2B} [Nm] (in.lb) MF i = 4	T_{2B} [Nm] (in.lb) MA i = 22	V_{Max} [m/min] (in/sec.) MF i = 4	V_{Max} [m/min] (in/sec) MA i = 22	m_{pinion} [kg] (lb_m)
TP+ 010	**2**	20	2400 (540)	2400 (540)	51 (452)	51 (452)	200 (132)	36 (24)	0.4 (0.9)
TP+ 025	**2**	20	3400 (765)	3400 (765)	72 (638)	72 (638)	150 (99)	36 (24)	0.4 (0.9)
	2	40	3400 (765)	3400 (765)	144 (1275)	144 (1275)	300 (197)	72 (48)	1.3 (2.9)
	3	20	3400 (765)	3400 (765)	108 (956)	108 (956)	225 (148)	54 (36)	1.0 (2.3)
TP+ 050	**2**	40	7100 (1598)	7100 (1598)	301 (2664)	301 (2664)	267 (176)	60 (40)	1.3 (2.9)
	3	20	11100 (2498)	11100 (2498)	353 (3125)	353 (3125)	200 (132)	45 (30)	1.0 (2.3)
	3	34	10800 (2430)	10800 (2430)	584 (5169)	584 (5169)	340 (224)	77 (51)	2.4 (5.4)
	4	20	10800 (2430)	10800 (2430)	458 (4054)	458 (4054)	267 (176)	60 (40)	2.0 (4.5)
TP+ 110	**3**	34	13000 (2925)	13000 (2925)	703 (6222)	703 (6222)	298 (196)	69 (46)	2.4 (5.3)
	4	20	21000 (4725)	21000 (4725)	891 (7886)	891 (7886)	233 (153)	54 (36)	2.0 (4.5)
	4	30	22000 (4950)	22000 (4950)	1401 (12399)	1401 (12399)	350 (230)	81 (54)	3.9 (8.7)
	5	19	21000 (4725)	21000 (4725)	1058 (9364)	1058 (9364)	277 (182)	64 (42)	3.1 (6.9)
	Module	**z**	**i = 5**	**i = 22**	**i = 5**	**i = 22**	**i = 5**	**i = 22**	
TP 300	**4**	30	22000 (4950)	22000 (4950)	1401 (12399)	1401 (12399)	200 (132)	54 (36)	3.9 (8.7)
	5	19	31000 (6975)	31000 (6975)	1562 (13824)	1562 (13824)	158 (104)	43 (29)	3.1 (6.9)
	5	30	30300 (6818)	30300 (6818)	2411 (21338)	2411 (21338)	250 (164)	68 (45)	10.4 (23)
	6	19	30500 (6863)	30500 (6863)	1845 (16329)	1845 (16329)	190 (125)	51 (34)	5.8 (12.9)
TP 500	**5**	30	34000 (7650)	34000 (7650)	2706 (23949)	2706 (23949)	220 (145)	68 (45)	10.4 (23)
	6	19	41000 (9225)	41000 (9225)	2480 (21948)	2480 (21948)	165 (109)	51 (34)	5.8 (12.9)
	6	28	41000 (9225)	41000 (9225)	3654 (32338)	3654 (32338)	245 (161)	76 (50)	14.5 (32.1)

Technical data based on 1000 load cycles per hour.
More combinations possible with cymex®

F_{2T} = Max. moving force
T_{2B} = Max. acceleration torque

MA = HIGH TORQUE
MF = Standard

In Z -axis without a balancing weight additional load changes can be caused due to additional movements in other axes.

Calculation including load factor:
$F_{2t} * L_F = F_{2t,\,LF} < F_{2T}$

Load factor for rack moving force

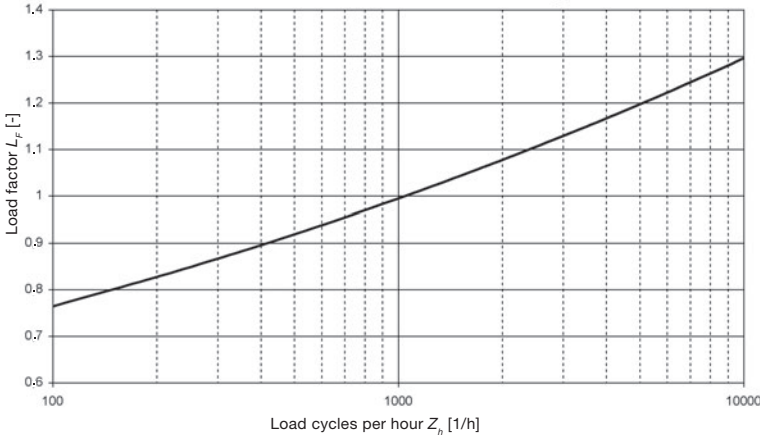

Premium Class RTP pinion on **TP output** with **Premium** and **Smart Class rack**

TP output	Module	z	A-PC ±0.3 b)	A-SC ±0.3 b)	b	B	d_a	d_w	$D5_{h7}$	D6	D7	D14	L4	L5	L7	L12	L16
TP⁺/TK⁺ 004	2	26	50.4	41.9	26	24	60.7	55.173	64	79	86	4.5	19.5	8	4	7.2	20.5
TP⁺/TK⁺/ TPK⁺ 010	2	29 a)	53.4	44.9	26	24	66.6	61.539	90	109	118	5.5	40	11	7	8.3	41
	2	33	57.6	49.1	26	24	75.1	70.028	90	109	118	5.5	30	11	7	8.3	31
	2	37	61.9	53.4	26	24	83.6	78.516	90	109	118	5.5	30	11	7	8.3	31
TP⁺/TK⁺/ TPK⁺ 025	2	35 a)	59.7	51.2	26	24	79.4	74.272	110	135	145	5.5	39	10	8	8.6	40
	2	40 c)	65.0	56.5	26	24	90.0	84.882	110	135	145	5.5	29	10	8	8.6	30
	2	45	70.2	61.7	26	24	100.2	95.493	110	135	145	5.5	29	10	8	8.6	30
TP⁺/TK⁺/ TPK⁺ 050	3	31 a)	76.2	66.7	31	29	106.4	98.676	140	168	179	6.6	51	14.5	10	11.3	52
	3	35 c)	82.6	73.1	31	29	119.1	111.408	140	168	179	6.6	38	14.5	10	11.3	39
	3	40 c)	90.6	81.1	31	29	135.0	127.324	140	168	179	6.6	38	14.5	10	11.3	39
TP⁺/TK⁺/ TPK⁺ 110	4	38	116.6	105.6	41	39	171.3	161.277	200	233	247	9	50	17.5	12	14.5	51
	4	40 d)	119.9	108.9	41	39	177.9	169.766	200	233	247	9	50	17.5	12	14.5	51
TP 300	5	32 a), c)	120.3	–	51	49	182.6	169.766	255	280	300	13.5	91	20	18	20	92
TP 500	6	31 a)	143.4	–	61	59	212.8	197.352	285	310	330	13.5	110	20	20	20	111

All dimensions in [mm]

a) with adapter flange

b) please contact us for precise dimensions; align mechanism recommended (alignment dimension ±0.3 mm)

c) also in combination with TP⁺ HIGH TORQUE

d) only in combination with TP⁺ HIGH TORQUE

z = Number of teeth

d_a = Tip diameter

d_w = Pitch diameter

True running accuracy < 10 µm (m2)

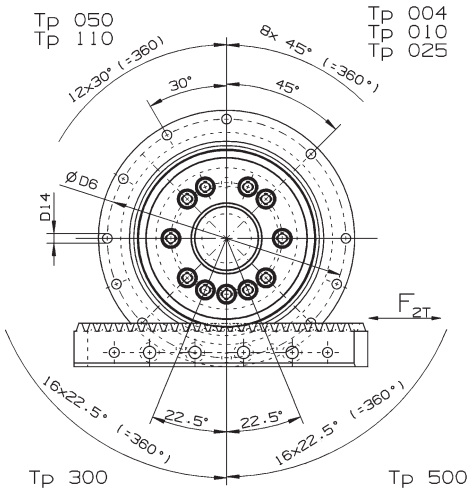

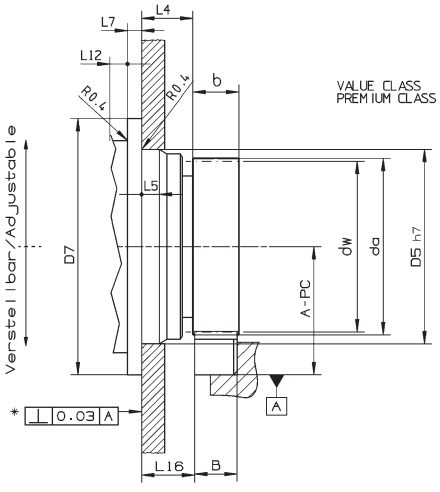

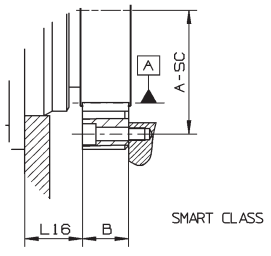

TP+ gearhead with Premium Class RTP pinion on TP output with Premium and Smart Class rack · Technical data for the smallest available ratio

	Module	z	F_{2T} [N] (lb_f) MF i = 4 (PC)	F_{2T} [N] (lb_f) MF i = 4 (SC)	F_{2T} [N] (lb_f) MA i = 22 (PC)	F_{2T} [N] (lb_f) MA i = 22 (SC)	T_{2B} [Nm] (in.lb) MF i = 4 (PC)	T_{2B} [Nm] (in.lb) MF i = 4 (SC)	T_{2B} [Nm] (in.lb) MA i = 22 (PC)	T_{2B} [Nm] (in.lb) MA i = 22 (SC)	V_{Max} [m/min] (in/sec) MF i = 4	V_{Max} [m/min] (in/sec) MA i = 22	m_{pinion} [kg] (lb_m)
TP+ 004	**2**	26	1400 (315)	1400 (315)	–	–	39 (346)	39 (346)	–	–	255 (168)	–	0.41 (0.91)
TP+ 010	**2**	29	2300 (518)	2300 (518)	–	–	71 (629)	71 (629)	–	–	290 (191)	–	0.45 (1)
	2	33	2550 (574)	2550 (574)	–	–	89 (788)	89 (788)	–	–	330 (217)	–	0.60 (1.33)
	2	37	2500 (563)	2500 (563)	–	–	98 (868)	98 (868)	–	–	370 (243)	–	0.80 (1.77)
TP+ 025	**2**	35	3400 (765)	3400 (765)	–	–	126 (1116)	126 (1116)	–	–	260 (171)	–	0.62 (1.38)
	2	40 [a]	3700 (833)	3700 (833)	3700 (833)	3700 (833)	157 (1390)	157 (1390)	157 (1390)	157 (1390)	300 (197)	72 (48)	0.85 (1.88)
	2	45	3600 (810)	3600 (810)	–	–	172 (1523)	172 (1523)	–	–	335 (220)	–	1.15 (2.55)
TP+ 050	**3**	31	10800 (24230)	9000 (2025)	–	–	533 (4718)	444 (3930)	–	–	310 (204)	–	1.40 (3.1)
	3	35 [a]	12000 (2700)	9000 (2025)	12000 (2700)	9000 (2025)	668 (5912)	501 (4434)	668 (5912)	501 (4434)	340 (224)	78 (52)	1.77 (3.92)
	3	40 [a]	12000 (2700)	9000 (2025)	12000 (2700)	9000 (2025)	764 (6762)	573 (5072)	764 (6762)	573 (5072)	390 (256)	90 (60)	2.50 (5.53)
TP+ 110	**4**	38	22000 (4950)	16000 (3600)	–	–	1774 (15700)	1290 (11417)	–	–	440 (289)	–	5.55 (12.27)
	4	40 [b]	–	–	22000 (4950)	16000 (3600)	–	–	1867 (16523)	1358 (12019)	–	108 (71)	5.24 (11.59)
	Module	**z**	**i = 5**		**i = 22**		**i = 5**		**i = 22**		**i = 5**	**i = 22**	
TP 300	**5**	32 [a]	28300 (6368)	–	28300 (6368)	–	2402 (21258)	–	2402 (21258)	–	265 (174)	72 (48)	6.47 (14.30)
TP 500	**6**	31	36400 (8190)	–	–	–	3592 (31790)	–	–	–	270 (178)	–	12.3 (27.19)

Technical data based on 1000 load cycles per hour.
More combinations possible with cymex®
[a] also in combination with TP+ HIGH TORQUE
[d] only in combination with TP+ HIGH TORQUE

F_{2T} = Max. moving force
T_{2B} = Max. acceleration torque
SC = Smart Class
PC = Premium Class

MA = HIGH TORQUE
MF = Standard

In Z -axis without a balancing weight additional load changes can be caused due to additional movements in other axes.

Calculation including load factor:
$F_{2t} * L_F = F_{2t,\,LF} < F_{2T}$

Load factor for rack moving force

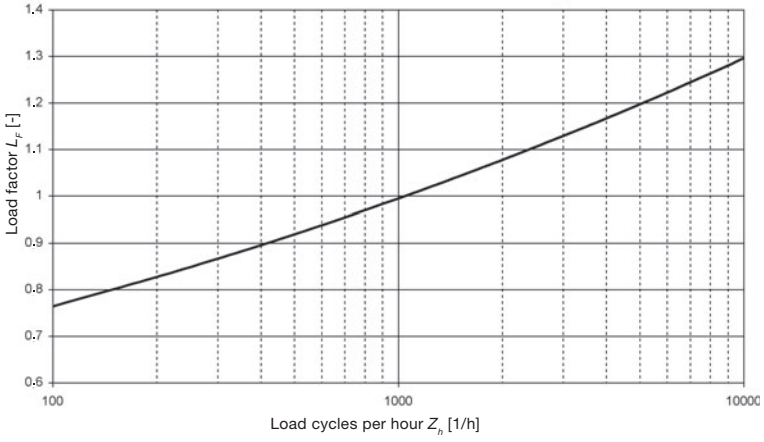

Premium Class+ pinion on **SP+ System output** with **Premium** and **Smart Class rack**

SP system output	Module	z	A-PC ±0,3[a]	A-SC ±0,3[a]	b	B	d_a	d_w	$D1_{g6}$	D4	D5	L3	L4	L11 ±1	L12	L13	L14	L15	L16
SP+ 075	**2**	20	44.0	35.5	26	24	48.3	42.441	70	6.6	85	20	7	76	61.0	40.5	20.5	8.5	28.5
SP+ 100	**2**	20	44.0	35.5	26	24	48.3	42.441	90	9	120	30	10	101	71.5	51.0	21.0	9	39
	2	40	64.4	55.9	26	24	89.2	84.883							71.0	51.0	21.0	9	39
	3	20	59.0	49.5	31	29	72.3	63.662							73.5	54.0	24.0	9.5	39.5
SP+ 140	**2**	40	64.4	55.9	26	24	89.2	84.883	130	11	165	30	12	141	75.0	54.5	24.5	12.5	42.5
	3	20	59.0	49.5	31	29	72.3	63.662							77.5	54.0	24.0	9.5	39.5
	3	34	80.1	70.6	31	29	114.5	108.226							77.0	54.0	24.0	9.5	39.5
	4	20	78.2	67.2	41	39	94.8	84.882							83.5	59.0	29.0	9.5	39.5
SP+ 180	**3**	34	80.1	70.6	31	29	114.5	108.226	160	13.5	215	30	15	182	82.0	57.5	27.5	13	43
	4	20	78.2	67.2	41	39	94.8	84.882							88.5	59.0	29.0	9.5	39.5
	4	30	98.7	87.7	41	39	135.6	127.324							87.0	59.0	29.0	9.5	39.5
	5	19	86.4	–	51	49	115.1	100.798							94.5	64.5	34.5	10	40
SP+ 210	**4**	30	98.7	87.7	41	39	135.6	127.324	180	17	250	38	17	215	99.9	70.4	32.5	13	50.9
	5	19	86.4	–	51	49	115.1	100.798							107.4	72.4	34.5	10	47.9
	5	30	113.6	–	51	49	169.4	159.155							105.9	72.4	34.5	10	47.9
	6	19	105.9	–	61	59	138.0	120.958							113.4	77.9	40.0	10.5	48.4
SP+ 240	**5**	30	113.6	–	51	49	169.4	159.155	200	17	290	40	20	242	109.9	78.9	39.0	14.5	54.4
	6	19	105.9	–	61	59	138.0	120.958							120.9	80.9	41.0	11.5	51.4
	6	28	132.1	_	61	59	190.5	178.254							119.9	80.9	41.0	11.5	51.4

All dimensions in [mm]

[a] please contact us for precise dimensions;
align mechanism recommended (alignment dimension ±0.3 mm)

z = Number of teeth
d_a = Tip diameter
d_w = Pitch diameter

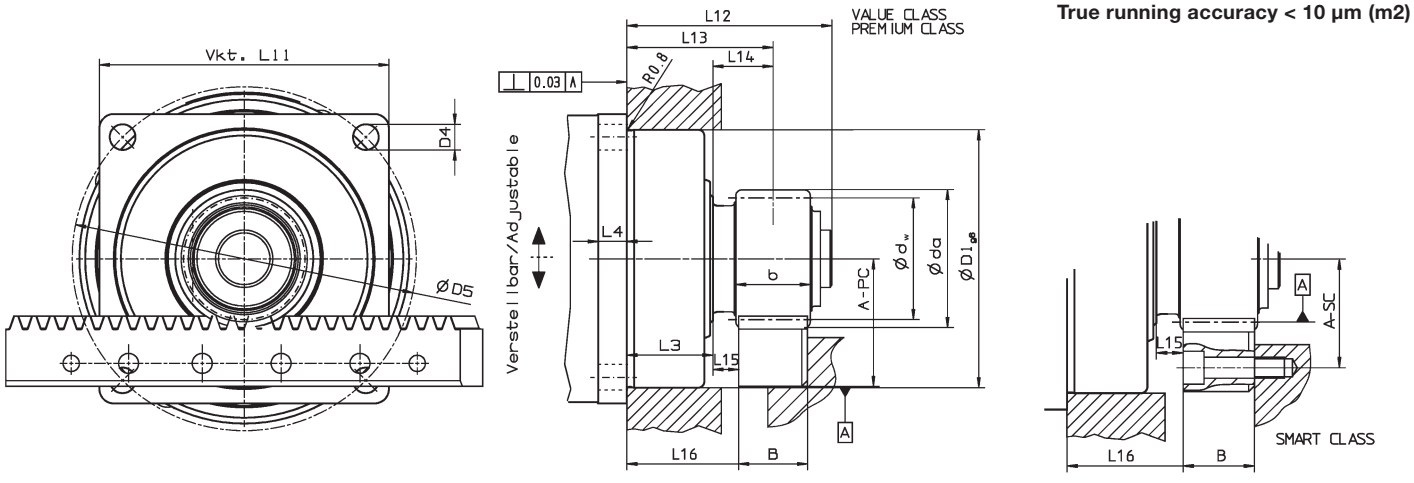

True running accuracy < 10 µm (m2)

SP⁺ gearhead with **Premium⁺ pinion on SP⁺ system output** with **Premium and Smart Class rack** · Technical data for the smallest available ratio

	Module	z	F_{2T} [N] (lb_f) i = 4 (PC)	F_{2T} [N] (lb_f) i = 4 (SC)	F_{2T} [N] (lb_f) i = 16 (PC)	F_{2T} [N] (lb_f) i = 16 (SC)	T_{2B} [Nm] (in.lb) i = 4 (PC)	T_{2B} [Nm] (in.lb) i = 4 (SC)	T_{2B} [Nm] (in.lb) i = 16 (PC)	T_{2B} [Nm] (in.lb) i = 16 (SC)	V_{Max} [m/min] (in/sec) i = 4	V_{Max} [m/min] (in/sec) i = 16	m_{pinion} [kg] (lb_m)
SP⁺ 075	**2**	20	3300 (743)	3300 (743)	3300 (743)	3300 (743)	68 (602)	68 (602)	68 (602)	68 (602)	200 (132)	50 (33)	0.4 (0.89)
SP⁺ 100	**2**	20	6400 (1440)	5000 (1125)	6400 (1440)	5000 (1125)	136 (1204)	106 (939)	136 (1204)	106 (939)	150 (99)	37 (25)	0.4 (0.89)
	2	40	6100 (1373)	5000 (1125)	6100 (1373)	5000 (1125)	259 (2293)	212 (1877)	259 (2293)	212 (1877)	300 (197)	75 (50)	1.3 (2.88)
	3	20	6000 (1350)	6000 (1350)	6000 (1350)	6000 (1350)	191 (1691)	191 (1691)	191 (1691)	191 (1691)	225 (148)	56 (37)	1.0 (2.21)
SP⁺ 140	**2**	40	7100 (1598)	5000 (1125)	7100 (1598)	5000 (1125)	301 (2664)	212 (1877)	301 (2664)	212 (1877)	266 (175)	66 (44)	1.3 (2.88)
	3	20	10000 (2250)	9000 (2025)	10000 (2250)	9000 (2025)	318 (2815)	286 (2532)	318 (2815)	286 (2532)	200 (132)	50 (33)	1.0 (2.21)
	3	34	9800 (2205)	9000 (2025)	9800 (2205)	9000 (2025)	530 (4691)	487 (4310)	530 (4691)	487 (4310)	340 (224)	85 (56)	2.4 (5.31)
	4	20	9400 (2115)	9400 (2115)	9400 (2115)	9400 (2115)	399 (3532)	399 (3532)	399 (3532)	399 (3532)	266 (175)	66 (44)	2.0 (4.42)
SP⁺ 180	**3**	34	13600 (3060)	9000 (2025)	13600 (3060)	9000 (2025)	736 (6514)	487 (4310)	736 (6514)	487 (4310)	297 (195)	85 (56)	2.4 (5.31)
	4	20	13600 (3060)	13600 (3060)	13600 (3060)	13600 (3060)	577 (5107)	577 (5107)	577 (5107)	577 (5107)	233 (153)	66 (44)	2.0 (4.42)
	4	30	13200 (2970)	13200 (2970)	13200 (2970)	13200 (2970)	840 (7434)	840 (7434)	840 (7434)	840 (7434)	350 (230)	100 (66)	3.9 (8.62)
	5	19	12800 (2880)	–	12800 (2880)	–	645 (5709)	–	645 (5709)	–	277 (182)	78 (52)	3.1 (6.86)
SP⁺ 210	**4**	30	21700 (4883)	16000 (3600)	21700 (4883)	16000 (3600)	1381 (1222)	1019 (9019)	1381 (12222)	1019 (9019)	250 (164)	87 (58)	2.0 (4.42)
	5	19	21800 (4905)	–	21800 (4905)	–	1099 (9727)	–	1099 (9727)	–	197 (130)	69 (46)	3.9 (8.62)
	5	30	21000 (4725)	–	21000 (4725)	–	1671 (14789)	–	1671 (14789)	–	312 (205)	109 (72)	3.1 (6.86)
	6	19	20600 (4635)	–	20600 (4635)	–	1246 (11028)	–	1246 (11028)	–	237 (156)	83 (55)	10.4 (22.99)
SP⁺ 240	**5**	30	31700 (7133)	–	31700 (7133)	–	2523 (22329)	–	2523 (22329)	–	275 (181)	109 (72)	10.4 (22.99)
	6	19	32000 (7200)	–	32000 (7200)	–	1935 (17125)	–	1935 (17125)	–	209 (138)	83 (55)	5.8 (12.82)
	6	28	31000 (697)	–	31000 (6975)	–	2763 (24453)	–	2763 (24453)	–	308 (203)	122 (81)	14.5 (32.05)

Technical data based on 1000 load cycles per hour.
More combinations possible with cymex®

F_{2T} = Max. moving force
T_{2B} = Max. acceleration torque

In Z -axis without a balancing weight additional load changes can be caused due to additional movements in other axes.

Calculation including load factor:
$F_{2t} * L_F = F_{2t,\,LF} < F_{2T}$

Load factor for rack moving force

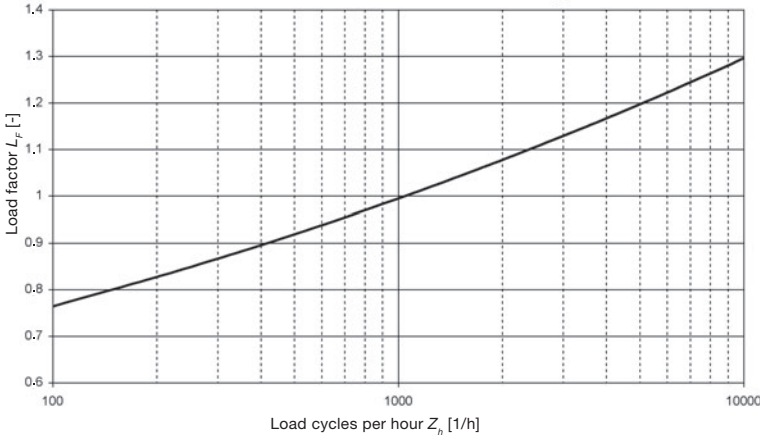

Standard Class RSP pinion with **SP involute output** with **Value** and **Smart Class rack**

Output with SP involute toothing DIN5480	Module	z	A-VC ±0.3 a)	A-SC ±0.3 a)	b	B	d_a	d_w	$D1_{g6}$	D4	D5	L3	L4	L11 ± 1	L12	L16	L23
SP+/ SK+ 060	2	15	38.9	30.4	26	24	37.7	31.831	60	5.5	68	20	6	62	2	27	32
	2	16	40.0	31.5	26	24	39.9	33.953	60	5.5	68	20	6	62	2	27	32
	2	18	41.9	33.4	26	24	43.7	38.197	60	5.5	68	20	6	62	2	27	32
SP+/SK+/ SPK+ 075	2	18	41.9	33.4	26	24	43.7	38.197	70	6.6	85	20	7	76	2.5	28	33
	2	20	44.0	35.5	26	24	48.0	42.441	70	6.6	85	20	7	76	2.5	28	33
	2	22	46.1	37.6	26	24	52.2	46.685	70	6.6	85	20	7	76	2.5	28	33
SP+/SK+/ SPK+ 100	2	23	47.2	38.7	26	24	54.3	48.807	90	9	120	30	10	101	3	39	34
	2	25	49.3	40.8	26	24	58.5	53.051	90	9	120	30	10	101	3	39	34
	2	27	51.2	42.7	26	24	62.4	57.295	90	9	120	30	10	101	3	39	34
SP+/SK+/ SPK+ 140	3	20	59.0	49.5	31	29	72.0	63.662	130	11	165	30	12	141	3	51	51
	3	22	62.2	52.7	31	29	78.3	70.028	130	11	165	30	12	141	3	51	51
	3	24	65.4	55.9	31	29	84.7	76.394	130	11	165	30	12	141	3	51	51
SP+/SK+/ SPK+ 180	4	20	79.0	68.0	41	39	96.1	84.883	160	13.5	215	30	15	182	3	44	54
SP+ 210	4	25	89.4	78.4	41	39	116.8	106.103	180	17	250	38	17	215	3	63	65
SP+ 240	5	24	99.4	–	51	49	140.8	127.324	200	17	290	40	20	242	3	63	73

All dimensions in [mm]

a) please contact us for precise dimensions;
align mechanism recommended (alignment dimension ± 0.3 mm)

z = Number of teeth
d_a = Tip diameter
d_w = Pitch diameter

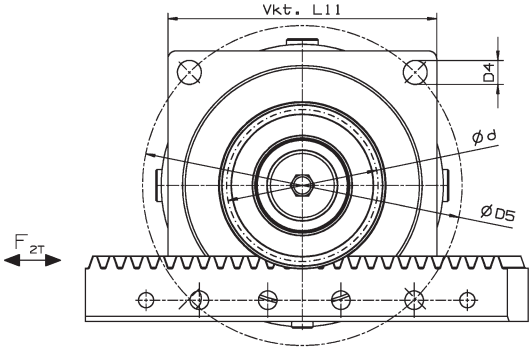

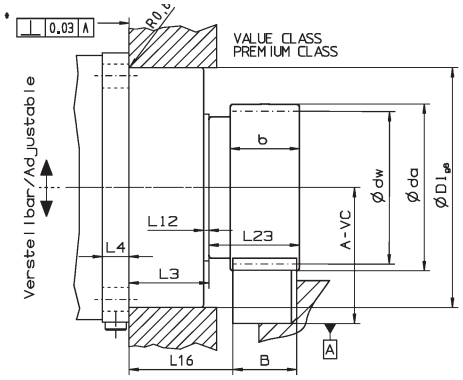

True running accuracy < 40 µm

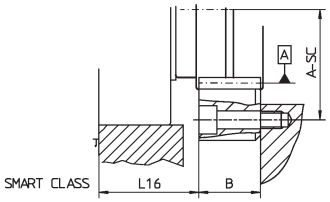

SP+ gearhead with **Standard Class RSP pinion** on **SP involute output** with **Value** and **Smart Class rack** · Technical data for the smallest available ratio

	Module	z	F_{2T} [N] (lb_f) i = 3 (VC)	F_{2T} [N] (lb_f) i = 3 (SC)	F_{2T} [N] (lb_f) i = 16 (VC)	F_{2T} [N] (lb_f) i = 16 (SC)	T_{2B} [Nm] (in.lb) i = 3 (VC)	T_{2B} [Nm] (in.lb) i = 3 (SC)	T_{2B} [Nm (in.lb)] i = 16 (VC)	T_{2B} [Nm] (in.lb) i = 16 (SC)	V_{Max} [m/min] (in/sec) i = 3	V_{Max} [m/min] (in/sec) i = 16	m_{pinion} [kg] (lb_m)
SP+ 060	**2**	15	1800 (405)	1800 (405)	2300 (518)	2300 (518)	29 (257)	29 (257)	37 (328)	37 (328)	200 (132)	37 (25)	0.18 (0.4)
	2	16	1700 (383)	1700 (383)	2300 (518)	2300 (518)	29 (257)	29 (257)	39 (346)	39 (346)	210 (138)	40 (27)	0.19 (0.42)
	2	18	1500 (338)	1500 (338)	2300 (518)	2300 (518)	29 (257)	29 (257)	44 (390)	44 (390)	240 (158)	45 (30)	0.23 (0.51)
SP+ 075	**2**	18	3300 (743)	3300 (743)	3300 (743)	3300 (743)	63 (558)	63 (558)	63 (558)	63 (558)	240 (158)	45 (30)	0.20 (0.45)
	2	20	3300 (743)	3300 (743)	3300 (743)	3300 (743)	70 (620)	70 (620)	70 (620)	70 (620)	260 (171)	50 (33)	0.26 (0.58)
	2	22	3300 (743)	3300 (743)	3300 (743)	3300 (743)	77 (682)	77 (682)	77 (682)	77 (682)	290 (191)	55 (37)	0.32 (0.71)
SP+ 100	**2**	23	4300 (968)	5000 (1125)	4300 (968)	5000 (1125)	105 (930)	122 (1080)	105 (930)	122 (1080)	230 (151)	43 (29)	0.29 (0.65)
	2	25	4300 (968)	5000 (1125)	4300 (968)	5000 (1125)	114 (1009)	133 (1178)	114 (1009)	133 (1178)	250 (164)	47 (31)	0.31 (0.69)
	2	27	4300 (968)	5000 (1125)	4300 (968)	5000 (1125)	123 (1089)	143 (1266)	123 (1089)	143 (1266)	270 (178)	51 (34)	0.46 (1.02)
SP+ 140	**3**	20	8000 (1800)	9000 (2025)	8000 (1800)	9000 (2025)	255 (2257)	286 (2532)	255 (2257)	286 (2532)	260 (171)	50 (33)	0.72 (1.60)
	3	22	8000 (1800)	9000 (2025)	8000 (1800)	9000 (2025)	280 (2478)	315 (2788)	280 (2478)	315 (2788)	290 (191)	55 (37)	0.98 (2.17)
	3	24	8000 (1800)	9000 (2025)	8000 (1800)	9000 (2025)	306 (2709)	344 (3045)	306 (2709)	344 (3045)	320 (210)	60 (40)	1.26 (2.79)
SP+ 180	**4**	20	13000 (2925)	13000 (2925)	13000 (2925)	13000 (2925)	552 (4886)	552 (4886)	552 (4886)	552 (4886)	310 (204)	66 (44)	1.38 (3.05)
SP+ 210	**4**	25	14000 (3150)	16000 (3600)	14000 (3150)	16000 (3600)	743 (6576)	849 (7514)	743 (6576)	849 (7514)	270 (178)	72 (48)	2.24 (4.96)
SP+ 240	**5**	24	22000 (4950)	–	22000 (4950)	–	1401 (12399)	–	1401 (12399)	–	290 (191)	87 (58)	3.96 (8.76)

Technical data based on 1000 load cycles per hour.
More combinations possible with cymex®

F_{2T} = Max. moving force
T_{2B} = Max. acceleration torque
SC = Smart Class
VC = Value Class

In Z -axis without a balancing weight additional load changes can be caused due to additional movements in other axes.

Calculation including load factor:
$F_{2t} * L_F = F_{2t,\,LF} < F_{2T}$

Load factor for rack moving force

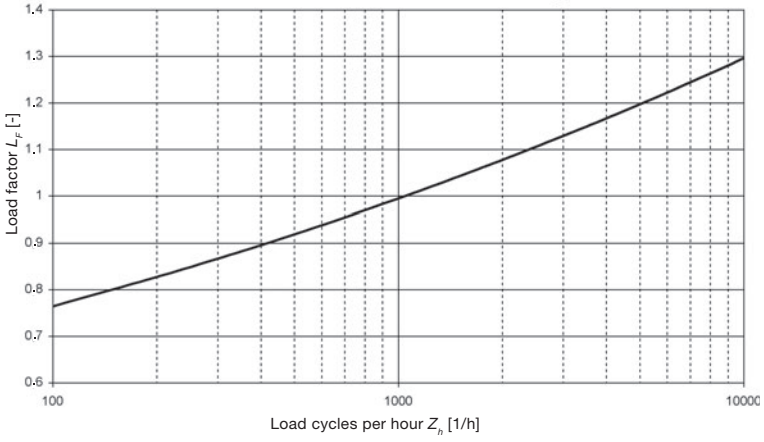

Value Class pinion (shrunk/bonded) on **shaft key** with **Value** and **Smart Class rack**

Key output	Module	z	A-VC ±0.3 a)	A-SC ±0.3 a)	b	B	d_a	d_w	$D1_{g6}$	D4	D5	D7	L3	L4	L11	L12	L13	L14	L15	L16
SP+/ SK+ 060	2	18	41.9	33.4	26	24	43.7	38.197	60	5.5	68	0	20	6	62	54	39	19	7	27
SP+/SK+/ SPK+ 075	2	22	45.7	37.2	26	24	51.4	46.686	70	6.6	85	40	20	7	76	62	40	20	8	28
SP+/SK+/ SPK+ 100	2	26	49.6	41.1	26	24	59.1	55.174	90	9	120	45	30	10	101	95.5	51	21	9	39
SP+/SK+/ SPK+ 140	3	24	64.2	54.7	31	29	82.3	76.395	130	11	165	58	30	12	141	122	65.5	35.5	21	51

All dimensions in [mm]
a) please contact us for precise dimensions; align mechanism recommended (alignment dimension ± 0.3 mm)

z = Number of teeth
d_a = Tip diameter
d_w = Pitch diameter

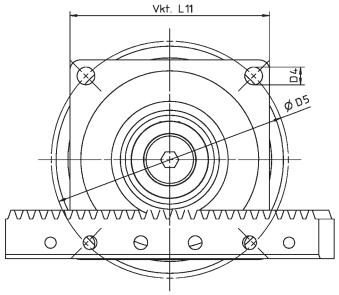

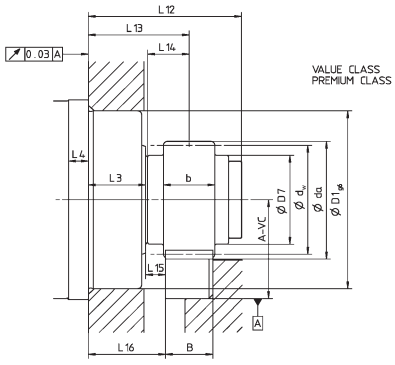

True running accuracy < 40 µm

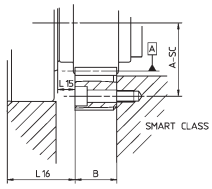

Value Class pinion (shrunk/bonded) on **shaft key** with **Value** and **Smart Class rack**

Key output	Module	z	A-VC ±0.3 a)	A-SC ±0.3 a)	b	B	d_a	d_w	$D1_{h6}$	D4	D5	D7	L3	L12	L13	L14	L15	L16
LP+/LK+/ LPK+ 070	2	18	41.9	33.4	26	24	43.7	38.197	52	M5	62	0	5	42	27	19	7	15
LP+/LK+/ LPK+ 090	2	22	45.7	37.2	26	24	51.4	46.686	68	M6	80	40	5	52	30	20	8	18
LP+/LK+/ LPK+ 120	2	26	49.6	41.1	26	24	59.1	55.174	90	M8	108	45	6	77.5	33	21	9	21
LP+/LK+/ LPK+ 155	3	24	64.2	54.7	31	29	82.3	76.395	120	M10	140	58	8	107	50.5	35.5	21	36

All dimensions in [mm]
a) please contact us for precise dimensions; align mechanism recommended (alignment dimension ± 0.3 mm)

z = Number of teeth
d_a = Tip diameter
d_w = Pitch diameter

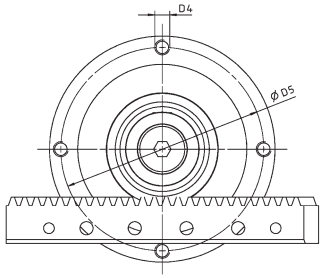

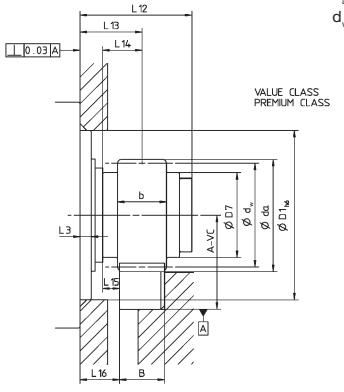

True running accuracy < 40 µm

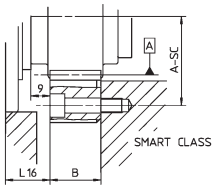

SP+ gearhead with Value Class pinion on shaft key with Value and Smart Class rack

	Ratio	Module	z	F_{2T} [N] (lb_f) (VC)	F_{2T} [N] (lb_f) (SC)	T_{2B} [Nm] (in.lb) (VC)	T_{2B} [Nm] (in.lb) (SC)	$F_{2T\,Not}$ [N] (lb_f)	$T_{2\,Not}$ [Nm] (lb_f)	V_{Max} [m/min] (in/sec) i = 5	V_{Max} [m/min] (in/sec) i = 25	m_{pinion} [kg] (lb_m)
SP+ 060	3	2	18	1550 (338)	1550 (349)	30 (266)	30 (266)	3000 (675)	57 (505)	–	–	0.3 (0.67)
	10, 100	2	18	1650 (372)	1650 (372)	32 (284)	32 (284)	3000 (675)	57 (505)	–	–	0.3 (0.67)
	4–7 / 16–70	2	18	2000 (450)	2000 (450)	38 (337)	38 (337)	3000 (675)	57 (505)	144 (95)	29 (20)	0.3 (0.67)
SP+ 075	All	2	22	3500 (788)	3500 (788)	82 (726)	82 (726)	5000 (1125)	117 (1036)	176 (116)	35 (23)	0.4 (0.89)
SP+ 100	All	2	26	4300 (968)	5000 (1125)	119 (1054)	138 (1222)	8500 (1913)	234 (2071)	156 (103)	31 (21)	0.6 (1.33)
SP+ 140	All	3	24	8000 (1800)	9000 (2025)	306 (2709)	344 (3045)	16000 (3600)	611 (5408)	192 (126)	38 (25)	1.6 (3.54)

Technical data based on 1000 load cycles per hour.
More combinations possible with cymex®

F_{2T} = Max. moving force
T_{2B} = Max. acceleration torque
SC = Smart Class
VC = Value Class

In Z -axis without a balancing weight additional load changes can be caused due to additional movements in other axes.

Calculation including load factor:
$F_{2t} * L_F = F_{2t,\,LF} < F_{2T}$

Load factor for rack moving force

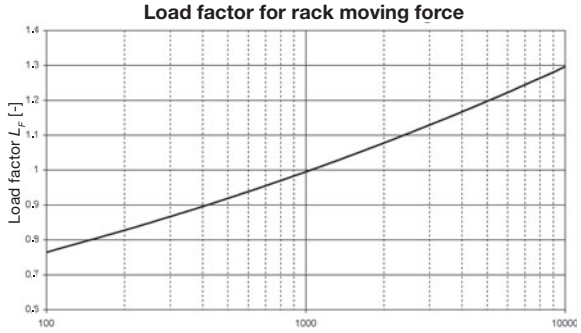

LP+ gearhead with Value Class pinion on shaft key with Value and Smart Class rack

	Ratio	Module	z	F_{2T} [N] (lb_f) (VC)	F_{2T} [N] (lb_f) (SC)	T_{2B} [Nm] (in.lb) (VC)	T_{2B} [Nm] (in.lb) (SC)	$F_{2T\,Not}$ [N] (lb_f)	$T_{2\,Not}$ [Nm] (lb_f)	V_{Max} [m/min] (in/sec) i = 5	V_{Max} [m/min] (in/sec) i = 25	m_{pinion} [kg] (lb_m)
LP+ 070	3, 10, 15, 30, 100	2	18	1700 (383)	1700 (383)	32 (284)	32 (284)	2700 (608)	52 (461)	–	–	0.3 (0.67)
	5, 7, 25, 50	2	18	1850 (417)	1850 (417)	35 (310)	35 (310)	2700 (608)	52 (461)	144 (95)	29 (20)	0.3 (0.67)
LP+ 090	3, 10, 15, 30, 100	2	22	3400 (765)	3400 (765)	79 (700)	79 (700)	4800 (1080)	112 (992)	–	–	0.4 (0.89)
	5, 7, 25, 50	2	22	3500 (788)	3500 (788)	82 (726)	82 (726)	4800 (1080)	112 (992)	176 (116)	35 (23)	0.4 (0.89)
LP+ 120	All	2	26	4100 (923)	4500 (1013)	113 (1001)	124 (1098)	7800 (1755)	215 (1903)	156 (103)	31 (21)	0.6 (1.33)
LP+ 155	All	3	24	6500 (1463)	7000 (1575)	248 (2195)	267 (2363)	14000 (3150)	535 (4735)	192 (126)	38 (25)	1.6 (3.54)

Technical data based on 1000 load cycles per hour.
More combinations possible with cymex®

F_{2T} = Max. moving force
T_{2B} = Max. acceleration torque
SC = Smart Class
VC = Value Class

In Z -axis without a balancing weight additional load changes can be caused due to additional movements in other axes.

Calculation including load factor:
$F_{2t} * L_F = F_{2t,\,LF} < F_{2T}$

Load factor for rack moving force

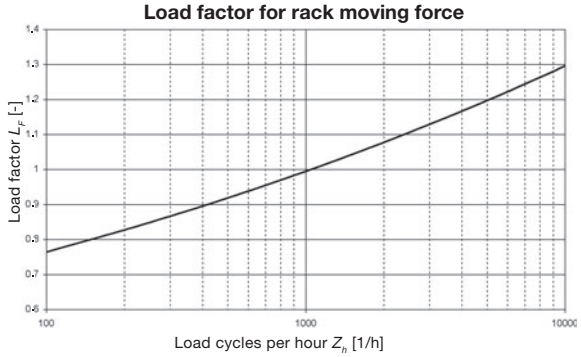

Perfect lubrication – **for a perfect system**

Efficient lubrication systems are essential in guaranteeing **a long service life** for our pinion and rack systems.
We offer you the right **felt pinions, fastening axles and lubricator sets,** adapted perfectly to our components. The lubricator supplies a preset quantity of grease to the felt pinion and guarantees a constant film of lubrication on the rack and pinion.

Complete lubrication system

Complete lubricator

Kit order number	Size
20021555	125
20022531	475

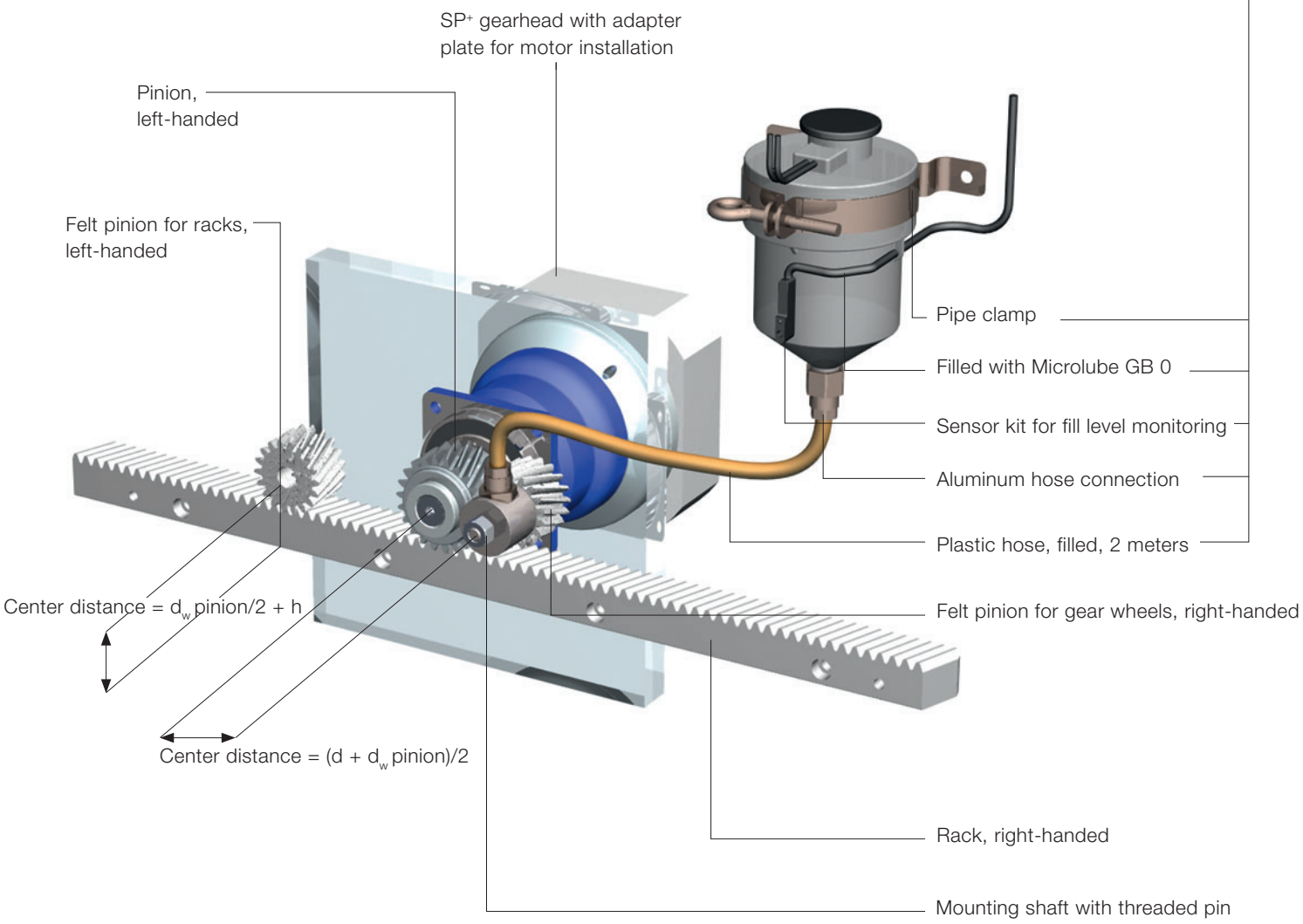

Replacement sensor for fill level monitoring

Lubricator type	Order number
125	20021557
475	20022535

The **sensor kit for fill level monitoring** included in the lubricator set enables your machine to permanently monitor the fill level in the lubricator so you utilize it more efficiently.

Felt pinion, helical-toothed

	Felt pinion							Fastening axle C					
	Module	Number of teeth	Order no.	d	d_1	d_k	b	Order no.	D	S	b	l	L
A	2	18 LH	20022364	38.2	12	42	25	20017836	30	M8	25.5	10	60
B	2	18 RH	20017681										
A	3	18 LH	20022359	57.3	12	63	30	20021477	30	M8	30.5	10	65
B	3	18 RH	20021473										
A	4	18 LH	20023115	76.4	12	84.4	40	20023119	30	M8	40.5	10	75
B	4	18 RH	20023106										
A	5	17 LH	20023116	90.2	20	100.2	50	20023120	50	M12	50.5	15	90
B	5	17 RH	20023111										
A	6	17 LH	20023117	108.2	20	120.2	60	20023121	50	M12	60.5	15	100
B	6	17 RH	20023113										

All dimensions in [mm]

B Felt pinion for pinions, right-handed RH

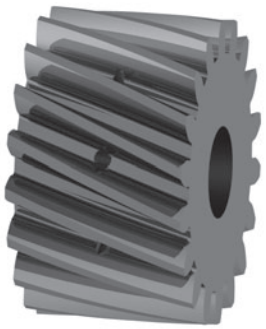

A Felt pinion for Racks, left-handed LH

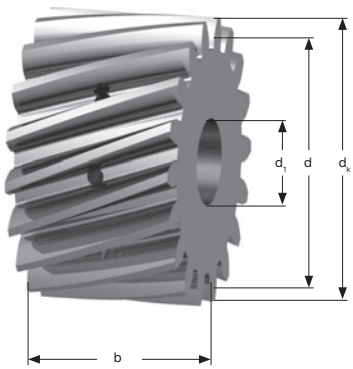

C Fastening axis for felt pinions

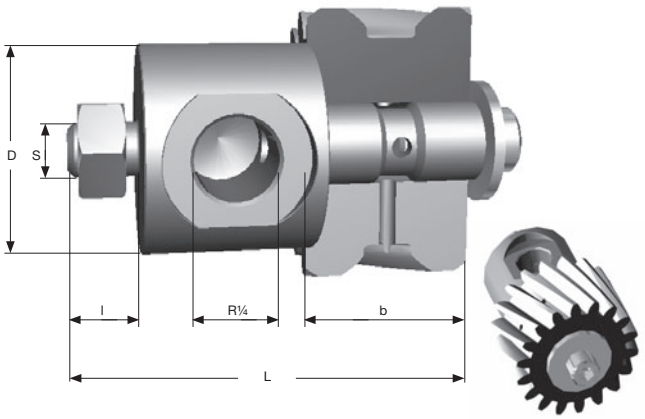

Dimensions of the lubricator

Kit order number	Size	D	D_1	D_2 [a]	D_3 [a]	L	L_1	A_1	A_2	Replacement lubricator [b]
20021555	125	80	68	R ¼″	6,5	114	13,5	95	48	20021556
20022531	475	115	103	R ½″	8,5	155	20	105	70	20022533

All dimensions in [mm]
[a] Lubricator connector
[b] No pipe clamp, hose, screw connection, synchronous cable or sensor kit

Nitrogen gas is generated in the electronically controlled lubricator. When the micro switches initiate the required dose, the nitrogen gas generated moves the piston continually. An emptying time of 1, 2, 3, 6, 12 or 18 months and individual lubricant quantities can be selected. Each product is supplied with detailed operating instructions.

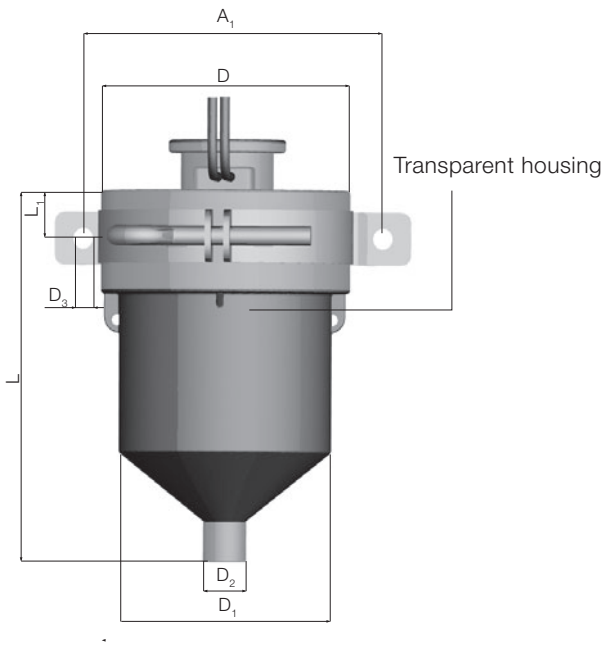

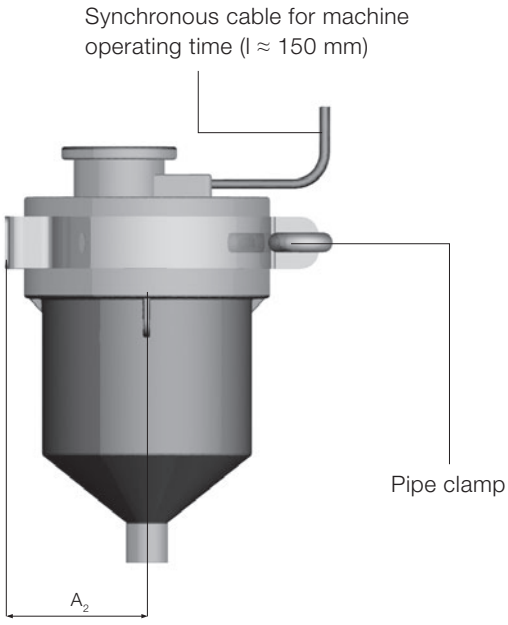

Technical data of lubricator

Lubricator type	125	475
Approx. capacity cm³	100	460
Connection thread	R ¼″	R ½″
Setting time	1, 2, 3, 6, 12 or 18 months	
Weight	370 g	1000 g
Pressure	0.2 to 3 bar	
Drive	2 x 1.5 V	4 x 1.5 V
Temperature range	10°C to 50°C	
Battery capacity	about 2000 mA/hr.	about 4000 mA/hr.
Battery consumption after 1 year	about 285 mA/hr.	about 800 mA/hr.
Grease filling	Klüber Microlube GB 0	
Accessories	Sensor, replacement lubricator	
Mounting position	Any	

Recommended lubrication

Depending on the conditions of use, it is possible to set the lubricator to various emptying times with a micro switch (1, 2, 3, 6,12 or 18 months).

Our recommendation for a constant movement speed of 90 m/min: for example, module 2: 0.175 to 0.35 cm³/day or module 3: 0.35 to 0.7 cm³/day

Grease dosing for felt pinion lubrication

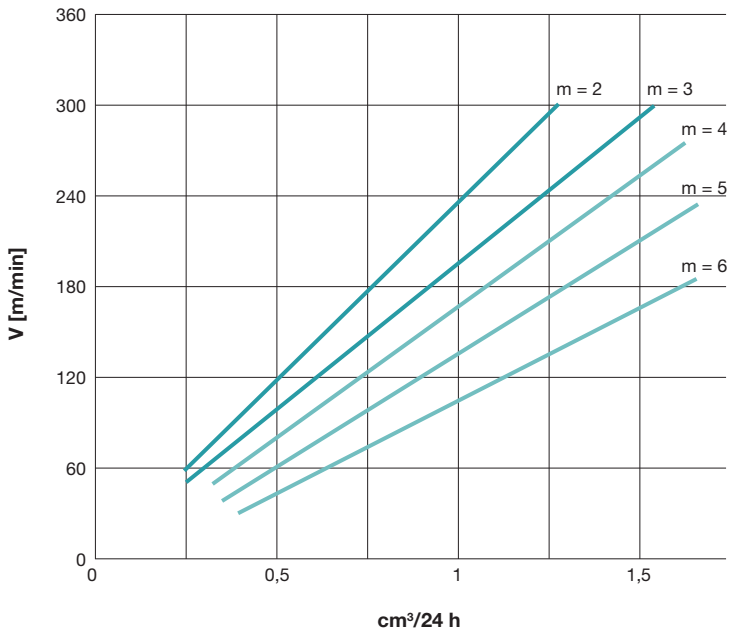

Assembly accessories

You will need an assembly jig to align the transfers between the individual racks. You will also need a needle roller when making a final check with the dial gauge.

Assembly jig

Module	L	z	B	H	h
2	100	14	24	24	22
3	100	9	29	29	26
4	156	8	46	46	41
5	156	7	46	46	41
6	156	7	46	46	40

Needle roller

Module	Order number
2	20001001
3	20000049
4	20038001
5	20038002
6	20038003

Bolts and cylinder pins

(not included in the scope of delivery)

To fasten each rack, you will need bolts and cylinder pins specified in the table below. The length of the bolts and pins depends on the design of the machine bed.

Module	Length	Class			Bolt DIN EN ISO 4762–12.9 (quantity x thread)	Tightening torque		Quantity x cylinder pin DIN EN ISO 2338 / DIN EN ISO 2338 / Cylinder pin with inner thread DIN7979 / DIN EN ISO 8735, form A
		Premium	Smart	Value		(Nm)	(in.lb)	
2	1000			x	8 x M6	16.5	(147)	2 x 6 m6
2	500	x			4 x M6	16.5	(147)	2 x 6 m6
2	480		x		8 x M8	40	(354)	2 x 8 m6
2	333	x			4 x M6	16.5	(147)	2 x 6 m6
2	167	x			2 x M6	16.5	(147)	2 x 6 m6
3	1000			x	8 x M8	40	(354)	2 x 8 m6
3	500	x			4 x M8	40	(354)	2 x 8 m6
3	480		x		8 x M10	81	(717)	2 x 10 m6
3	250	x			2 x M8	40	(354)	2 x 8 m6
4	1000			x	8 x M8	40	(354)	2 x 8 m6
4	507	x			4 x M10	81	(717)	2 x 10 m6
4	480		x		8 x M12	140	(1239)	2 x 10 m6
5	1000			x	8 x M12	140	(1239)	2 x 12 m6
5	500	x			4 x M12	140	(1239)	2 x 12 m6
6	1000			x	8 x M16	220	(1947)	2 x 16 m6
6	500	x			4 x M16	220	(1947)	2 x 16 m6



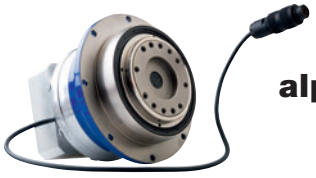

alpha IQ – WITTENSTEIN alpha gearbox with integrated sensors – helping you better understand your processes

alpha IQ

Details

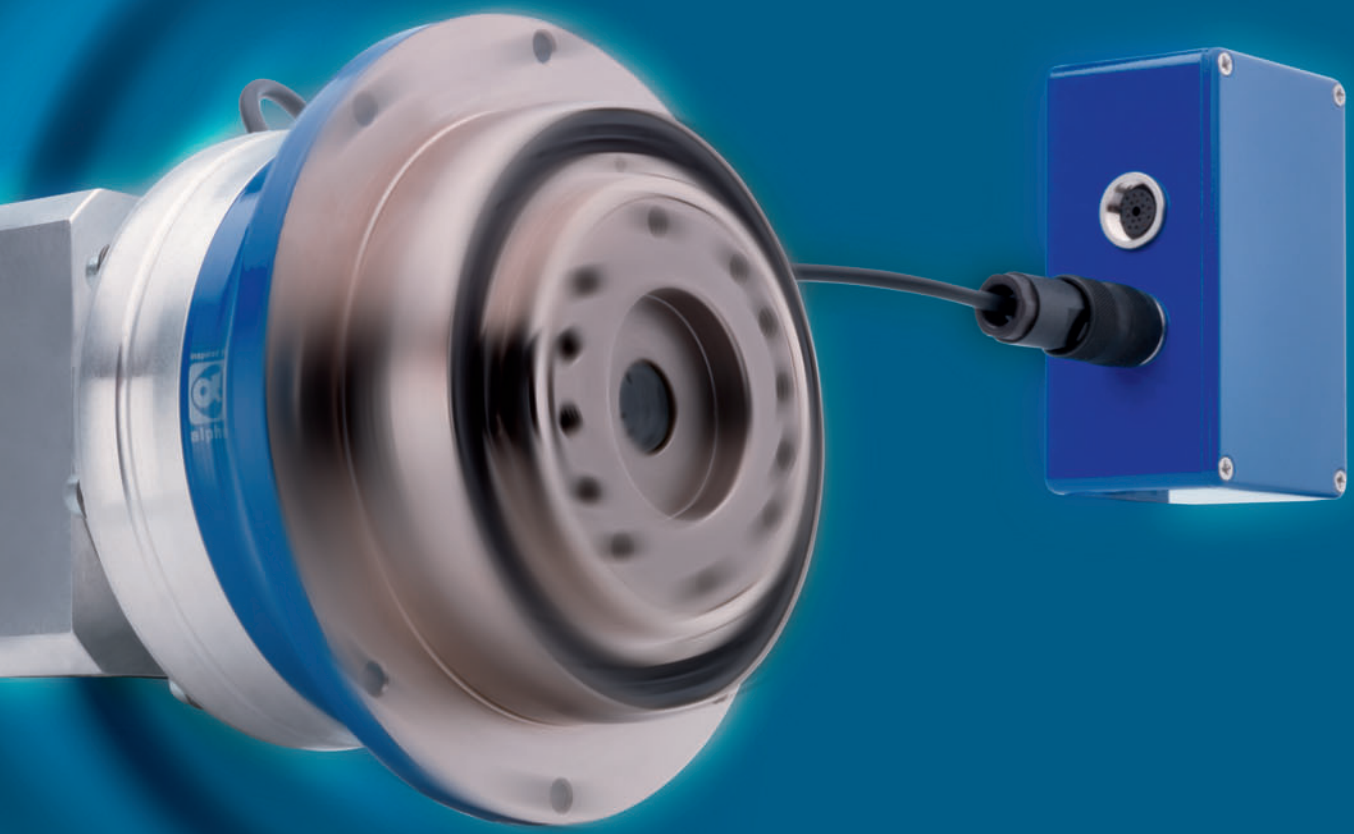

Understanding processes through **intelligent sensor gearboxes**
– low backlash planetary gearboxes + integrated sensors

Sensor gearboxes allow you to measure, diagnose and assess process parameters directly, i.e. all mechanical loads processed by the gearbox can be measured at the output drive.



Sensor gearbox information

Gearbox
Low backlash planetary gearboxes of renowned WITTENSTEIN alpha quality

Sensors
Intelligent sensor technology integrated in the gearbox

Electronics box
Receives signals from the gearbox and serves as a communication and storage medium

Application areas of the sensor gearbox and **customer benefits**

Diagnosis

alpha IQ allows you to measure the forces generated in the existing application without modifying the machine design.
This measurement then forms the basis for optimization measures for the drive train design and allows you to select the **right drive system components** and verify calculations to save valuable resources.

Process monitoring

By measuring key parameters, sensor gearboxes provide a revealing insight into previously unknown process mechanisms.
A more accurate understanding of machine processes can be applied directly to **improve process stability**.

Process control

Measurements provide valuable information that can be used to control and optimize your manufacturing process in realtime.
This simple method for **optimizing processes** will impress your customers.

alpha IQ – Measured parameters

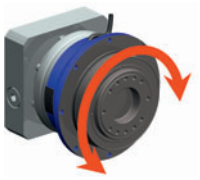
Torque

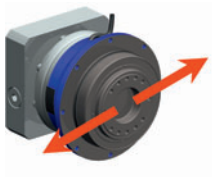
X direction


Y direction



Temperature

Software
Calibration or display and evaluation software

Interfaces
RS232, voltage interface, current interface and field buses via gateway

Gearbox types and sizes
SP⁺ 075, SP⁺ 100, SP⁺ 140
TP⁺ 010, TP⁺ 025, TP⁺ 050



Couplings – precision transmission of movement

Couplings

Details

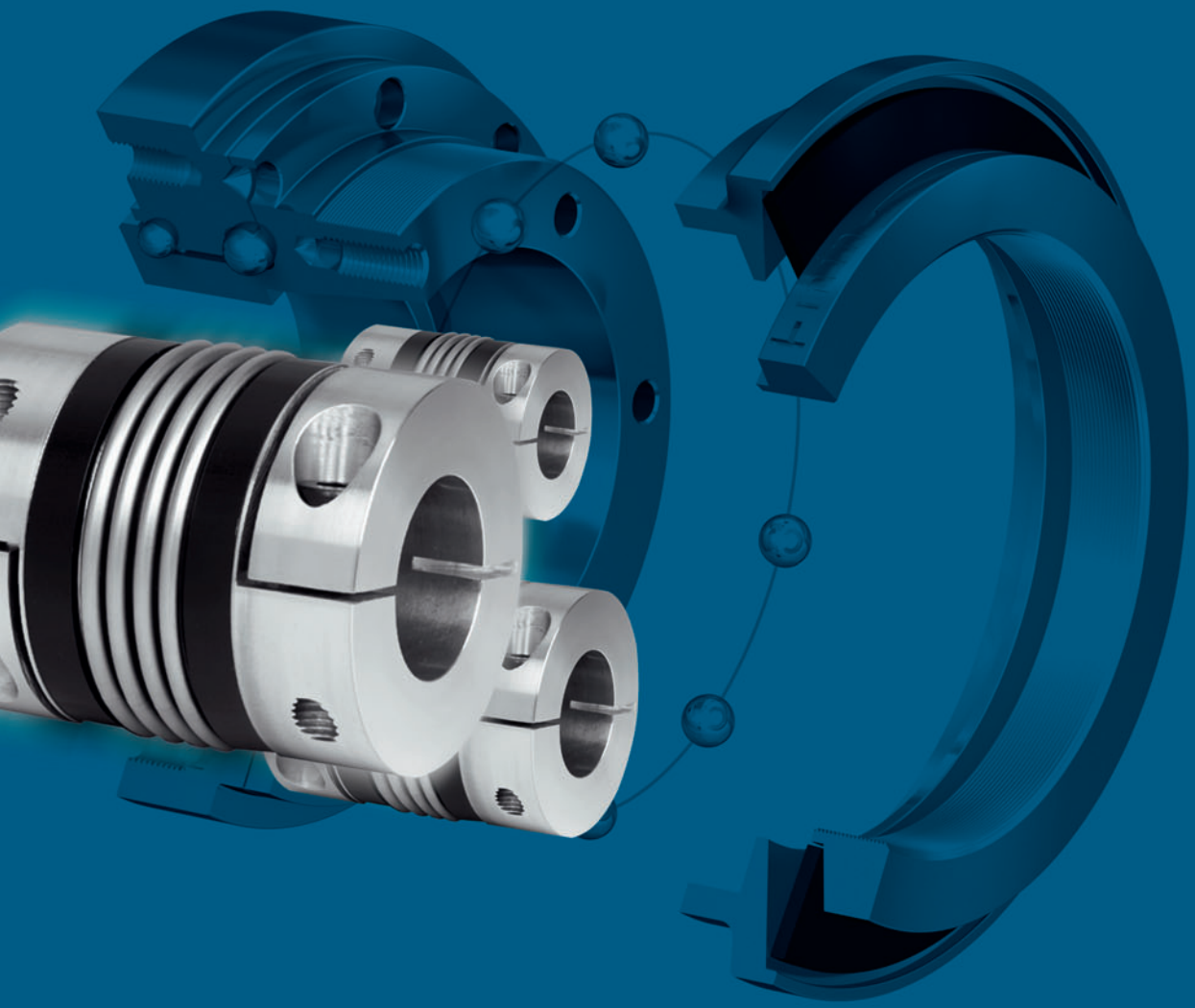

Safe torque limitation

Single position re-engagement – standard version

After the overload has been removed, the torque limiter can be re-engaged precisely 360 degrees from the original disengagement position.
A proven principle that guarantees synchronism. Signal in the event of an overload. Suitable for use in machine tools, packaging machines and automation systems.



Load holding version

In the event of an overload, the drive and the drive elements are not separated or are only allowed limited rotation. Guaranteed load safety. Automatic engagement of the torque limiter after the torque level has dropped. Signal in the event of an overload. Suitable for use on presses or load-lifting equipment.

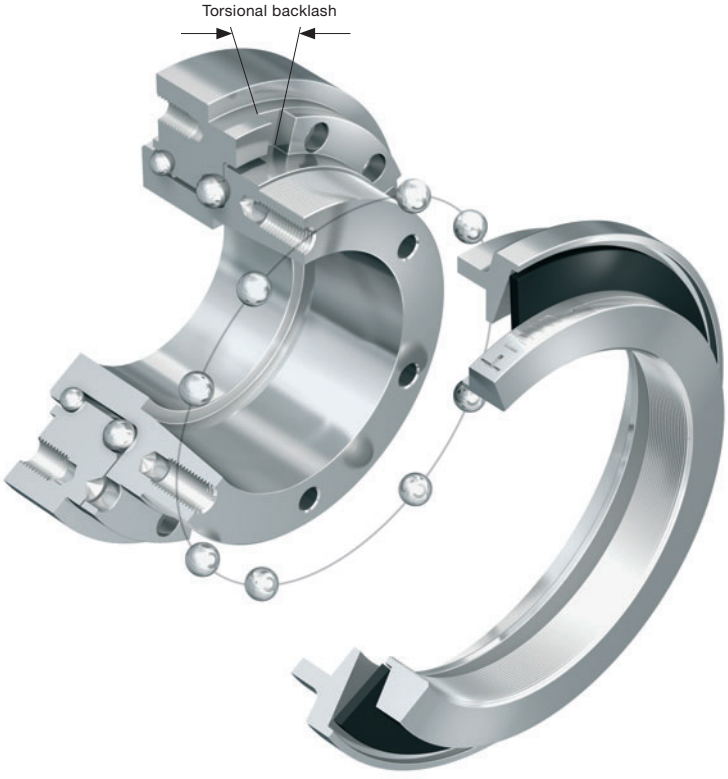

Multi-position version

Coupling re-engages automatically at the very next ball detent. The coupling is immediately ready for operation again at several points after an overload. Immediate availability of the machine or plant as soon as the overload has been removed. Signal in the event of an overload. Standard engagement after 60 degrees. Optional engagement after 30, 45, 60, 90 and 120 degrees.

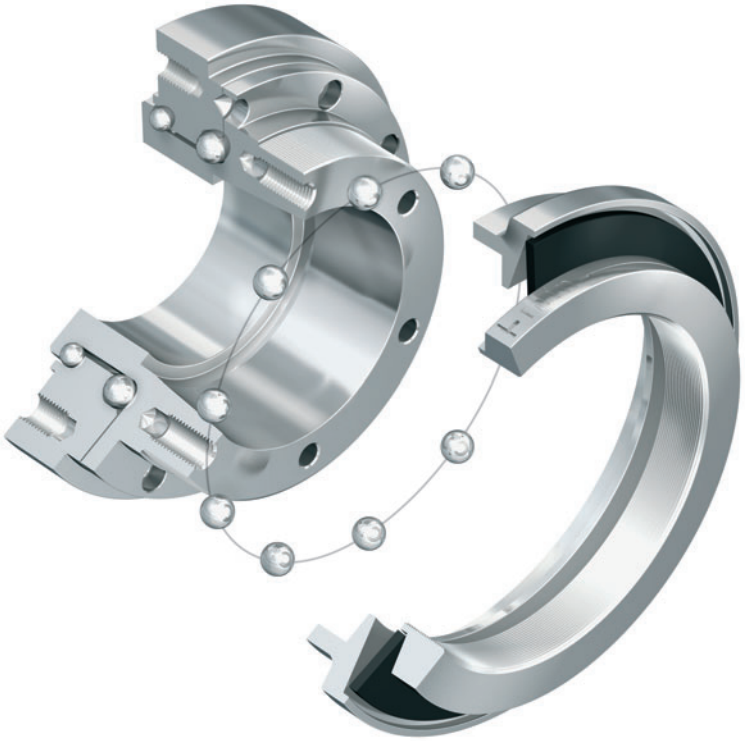

Full disengagement version

Permanent separation of the drive and the drive elements in the event of an overload. Spring flips over completely. No residual friction. Torque limiter can be re-engaged manually (re-engagement possible every 60 degrees).

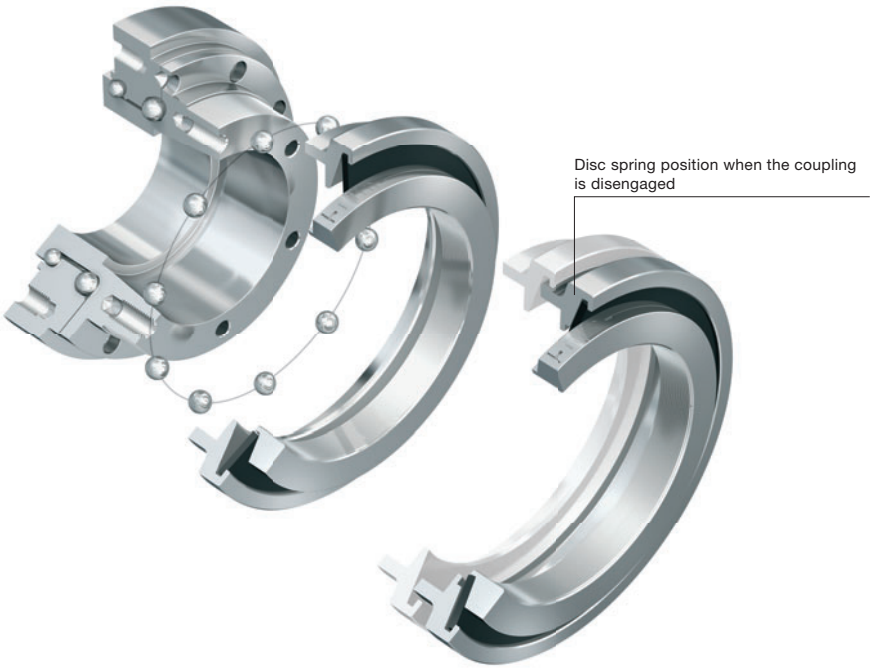

TL1 – Torque limiter

				Series													
				Miniature design series													
				1.5	2	4.5	10	15	30	60	150	200	300	500	800	1500	2500
Adjustment range from – to (approx. values)	T_{KN}	Nm	A	0.1–0.6	0.2–1.5	1–3	2–6	5–15	5–20	10–30	20–70	30–90	100–200	80–200	400–650	600–800	1500–2000
		in.lb		1-69	2-14	9-27	18-54	45-133	45-177	89-266	177-620	266-797	885-1770	708-1770	3540-5753	5310-7080	13275-17700
		Nm	B	0.4–1	0.5–2.2	2–4.5	4–12	12–25	10–30	25–80	45–150	60–160	150–240	200–350	500–800	700–1200	2000–2500
		in.lb		4-9	5-20	18-40	36-107	107-222	89-266	222-708	399-1328	531-1416	1328-2124	1770-3098	4425-7080	6195-10620	17700-22125
		Nm	C	0.8–2	1.5–3.5	3–7	7–18	20–40	20–60	50–115	80–225	140–280	220–440	320–650	650–950	1000–1800	2300–2800
		in.lb		8-18	14-31	27-62	62-160	177-354	177-531	443-1018	708-1992	1239-2478	1947-3894	2832-5753	5753-8408	8850-15930	20355-24780
		Nm	D	–	–	–	–	35–70	50–100	–	–	250–400	–	–	–	–	–
		in.lb						310-620	443-885			222-3540					
Adjustment range from – to (approx. values), full disengagement	T_{KN}	Nm	A	0.3–0.8	0.5–2	2.5–4.5	2–5	7–15	8–20	10–30	20–60	80–140	120–180	50–150	200–400	1000–1250	1400–2200
		in.lb		3-8	5-18	23-40	18-45	62-133	71-177	89-266	177-531	708-1239	1062-1593	443-1328	1770-3540	8850-11063	12390-19470
		Nm	B	0.6–1.3	–	–	4–10	–	16–30	20–40	40–80	130–200	160–300	100–300	450–850	1250–1500	1800–2700
		in.lb		6-12			36-89		142-266	177-354	354-708	1151-1770	1416-2655	885-2655	3983-7523	11063-13275	15930-23895
		Nm	C	–	–	–	8–15	–	–	30–60	80–150	–	–	250–500	–	–	–
		in.lb					71-133			266-531	708-1328			2213-4425			
Overall length	A	mm		23	28	32	39	40	50	54	58	63	70	84	95	109	146
Overall length, full disengagement	A^F	mm		23	28	32	39	40	50	54	58	66	73	88	95	117	152
Outer diameter of actuation ring	B	mm		23	29	35	45	55	65	73	92	99	120	135	152	174	242
Actuation ring Ø, full disengagement	B^F	mm		24	32	42	51.5	62	70	83	98	117	132	155	177	187	258
Clamping fit length	C	mm		7	8	11	11	19	22	27.5	32	32	41	41	49	61	80
Inner diameter from Ø to Ø H7	D	mm		4–8	4–12	5–14	6–20	8–22	12–22	12–29	15–37	20–44	25–56	25–56	30–60	35–70	50–100
Centering diameter h7	E	mm		14	22	25	34	40	47	55	68	75	82	90	100	125	168
Hole circle diameter ±0.2	F	mm		22	28	35	43	47	54	63	78	85	98	110	120	148	202
Flange diameter – 0.2	G	mm		26	32	40	50	53	63	72	87	98	112	128	140	165	240
Thread	H			4xM2	4xM2.5	6xM2.5	6xM3	6xM4	6xM5	6xM5	6xM6	6xM6	6xM8	6xM8	6xM10	6xM12	6xM16
Thread length	I	mm		3	4	4	5	6	8	9	10	10	10	12	15	16	24
Centering length – 0.2	J	mm		2.5	3.5	5	8	3	5	5	5	5	6	9	10	13.5	20
Distance	K	mm		5	6	8	11	8	11	11	12	12	15	21	19	25	34
Distance	L	mm		11	15	17	22	27	35	37	39	44	47	59	67	82	112
Distance, full disengagement	L^F	mm		11.5	16	18	24	27	37	39	41.5	47	51.5	62	75	91	120
Distance	M			2.5	4	4	5	–	–	–	–	–	–	–	–	–	–
Screws to ISO 4762	N			M2.5	M3	M4	M4	M4	M5	M5	M6	M6	M8	M8	M10	M12	M16
Tightening torque	N	Nm		1	2	4	4.5	4	6	8	12	14	18	25	40	70	120
		in.lb		9	18	36	40	36	54	71	107	124	160	222	354	620	1062
Outer diameter of clamping ring	O_1	mm		20	25	32	40	–	–	–	–	–	–	–	–	–	–
Diameter	O_2	mm		13	18	21	30	35	42	49	62	67	75	84	91	112	154
Diameter h7	O_3	mm		11	14	17	24	27	32	39	50	55	65	72	75	92	128
Distance between centers	P	mm		6.5	8	10	15	–	–	–	–	–	–	–	–	–	–
Distance	R	mm		1	1.3	1.5	1.5	2.5	2.5	2.5	2.5	3	3	4	4	4.5	6
Moment of inertia	J	10^{-3} kgm²		0.01	0.02	0.05	0.07	0.15	0.25	0.50	1.60	2.70	5.20	8.60	20	31.5	210
		in.lb.s².10^{-3}		0.0089	0.0177	0.0443	0.0620	0.1328	0.2213	0.4425	1.4161	2.3897	4.6024	7.6116	17.7014	27.8797	185.86
Approx. weight		kg		0.03	0.065	0.12	0.22	0.4	0.7	1.0	1.3	2.0	3.0	4.0	5.5	10	28
		lb		0.066	0.143	0.265	0.485	0.882	1.543	2.205	2.866	4.409	6.614	8.818	12.125	22.046	61.729
Actuation path		mm		0.7	0.8	0.8	1.2	1.5	1.5	1.7	1.9	2.2	2.2	2.2	2.2	3.0	3.0

A^F, B^F, L^F = Full disengagement version

Torque limiter TL1 (1.5 – 10)
With clamping hub

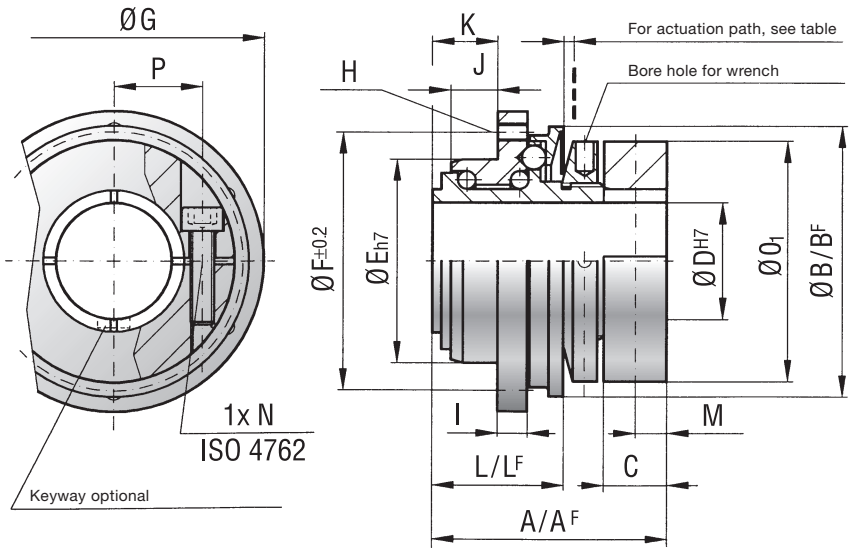

Torque limiter TL1 (15 – 2500)
With conical clamping hub

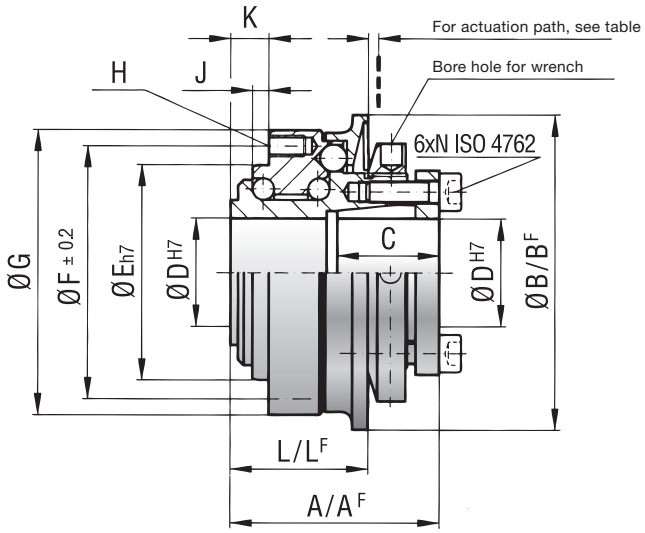

Torque limiter for timing belt and sprocket applications

Material:
High-strength, hardened steel.

Design:
Model TL1: 1.5 – 10 Nm (13.3 – 88.5 in.lb)
with split clamping hub.
Model TL1: 15 – 2500 Nm (132.8 – 22125 in.lb)
with conical clamping hub.

Temperature range: -30 to +120°C (-22 to 248°F)

Temperature peaks: up to +150°C (302°F)

Backlash:
Completely backlash-free as a result of the
frictional clamp connection and patented preload.

Service life:
These torque limiters are permanent and
maintenance-free as long as the performance limits are not
exceeded.

Fit tolerance: Tolerance between shaft and hub 0.01 – 0.05 mm

TL2 – Torque limiter

				Series																													
				1.5	2		4.5		10		15		30		60		80		150		200		300		500		800	1500
Length options (see ordering code)				A	A	B	A	B	A	B	A	B	A	B	A	B	A	B	A	B	A	B	A	B	A	B	A	A
Adjustment range from – to (approx. values)	T_{KN}	Nm	A	0.1–0.6	0.2–1.5		1–3		2–6		5–10		10–25		10–30		20–70		20–70		30–90		100–200		80–200		400–650	650–800
		in.lb		1-6	2-14		9-27		18-54		45-89		89-222		89-266		177-620		177-620		266-797		885-1770		708-1770		3540-5753	5753-7080
		Nm	B	0.4–1	0.5–2		3–6		4–12		8–20		20–40		25–28		30–90		45–150		60–160		150–240		200–350		500–800	700–1200
		in.lb		4-9	5-18		27-54		36-107		71-177		177-354		222-248		266-797		399-1328		531-1416		1328-2124		1770-3098		4425-7080	6195-10620
		Nm	C	0.8–1.5	–		–		–		–		–		–		–		80–180		120–240		200–320		300–500		650–850	1000–1800
		in.lb		8-14															708-1593		1062-2124		1770-2832		2655-4425		5753-7523	8850-15930
Adjustment range from – to (approx. values), full disengagement	T_{KN}	Nm	A	0.3–0.8	0.5–2		2.5–4.5		2–5		7–15		8–20		20–40		20–60		20–60		80–140		120–180		60–150		200–400	1000–1250
		in.lb		3-8	5-18		23-40		18-45		62-133		71-177		177-354		177-531		177-531		708-1239		1062-1593		531-1328		1770-3540	8850-11063
		Nm	B	0.6–1.3	–		–		5–10		–		16–30		30–60		40–80		40–80		130–200		180–300		100–300		450–800	1250–1500
		in.lb		6-12					45-89				142-266		266-531		354-708		354-708		1151-1770		1593-2655		885-2655		3983-7080	11063-13275
		Nm	C	–	–		–		–		–		–		–		–		80–150		–		–		250–500		–	–
		in.lb																	708-1328						2213-4425			
Overall length	A	mm		42	46	51	57	65	65	74	75	82	87	95	102	112	115	127	116	128	128	140	139	153	163	177	190	223
Overall length, full disengagement	A^F	mm		42	46	51	57	65	65	74	75	82	87	95	102	112	117	129	118	130	131	143	142	156	167	181	201	232
Actuation ring Ø	B	mm		23	29		35		45		55		65		73		92		92		99		120		135		152	174
Actuation ring Ø, full disengagement	B^F	mm		24	32		42		51.5		62		70		83		98		98		117		132		155		177	187
Fit length	C	mm		11	13		16		16		22		27		31		35		35		40		42		51		48	67
Inner diameter from Ø to Ø H7	D_1/D_2	mm		3–8	4–12		5–14		6–20		10–26		12–30		15–32		19–42		19–42		24–45		30–60		35–60		40–75	50–80
Outer diameter of coupling	E	mm		19	25		32		40		49		55		66		81		81		90		110		123		134	157
Distance	F	mm		12	13		15		17		19		24		30		31		31		35		35		45		50	65
Distance, full disengagement	F^F	mm		11.5	12		14		16		19		22		29		31		30		33		35		43		54	61
Distance	G	mm		3.5	4		5		5		6.5		7.5		9.5		11		11		12.5		13		17		18	22.5
Distance between centers	H	mm		6	8		10		15		17		19		23		27		27		31		39		41		2x48	2x55
Screws to ISO 4762	I			M2.5	M3		M4		M4		M5		M6		M8		M10		M10		M12		M12		M16		2xM16	2xM20
Tightening torque	I	Nm		1	2		4		4.5		8		15		40		50		70		120		130		200		250	470
		in.lb		9	18		36		40		71		133		354		443		620		1062		1151		1770		2213	4160
Approx. weight		kg		0.035	0.07		0.2		0.3		0.4		0.6		1.0		2.0		2.4		4.0		5.9		9.6		14	21
		lb		0.08	0.15		0.44		0.66		0.88		1.32		2.21		4.41		5.30		8.82		13.1		21.2		30.9	46.3
Moment of inertia	J	10^{-3} kgm²		0.01	0.01	0.01	0.02	0.02	0.06	0.07	0.10	0.15	0.27	0.32	0.75	0.80	1.80	1.90	2.50	2.80	5.10	5.30	11.5	11.8	22.8	23.0	42.0	83.0
		10^{-3} in.lb.s²		0.0089	0.0089	0.0089	0.0177	0.0177	0.0531	0.0620	0.0885	0.1328	0.2390	0.2832	0.6638	0.7081	1.59	1.68	2.21	2.48	45.1	46.9	10.2	10.4	20.2	20.4	37.2	73.5
Torsional rigidity	C_T	10^{-3} Nm/rad		0.7	1.2	1.3	7	5	9	8	20	15	39	28	76	55	129	85	175	110	191	140	420	350	510	500	780	1304
Lateral misalignment		mm		0.15	0.15	0.20	0.20	0.25	0.20	0.30	0.15	0.20	0.20	0.25	0.20	0.25	0.20	0.25	0.20	0.25	0.25	0.30	0.25	0.30	0.30	0.35	0.35	0.35
Angular misalignment		degrees		1	1	1.5	1.5	2	1.5	2	1	1.5	1	1.5	1	1.5	1	1.5	1	1.5	1.5	2	1.5	2	2	2.5	2.5	2.5
Lateral spring stiffness		N/mm		70	40	30	290	45	280	145	475	137	900	270	1200	420	920	255	1550	435	2040	610	3750	1050	2500	840	2000	3600
Actuation path		mm		0.7	0.8		0.8		1.2		1.5		1.5		1.7		1.9		1.9		2.2		2.2		2.2		2.2	3.0

A^F, B^F, L^F = Full disengagement version
Smaller sizes on request

Torque limiter TL2
With clamping hub

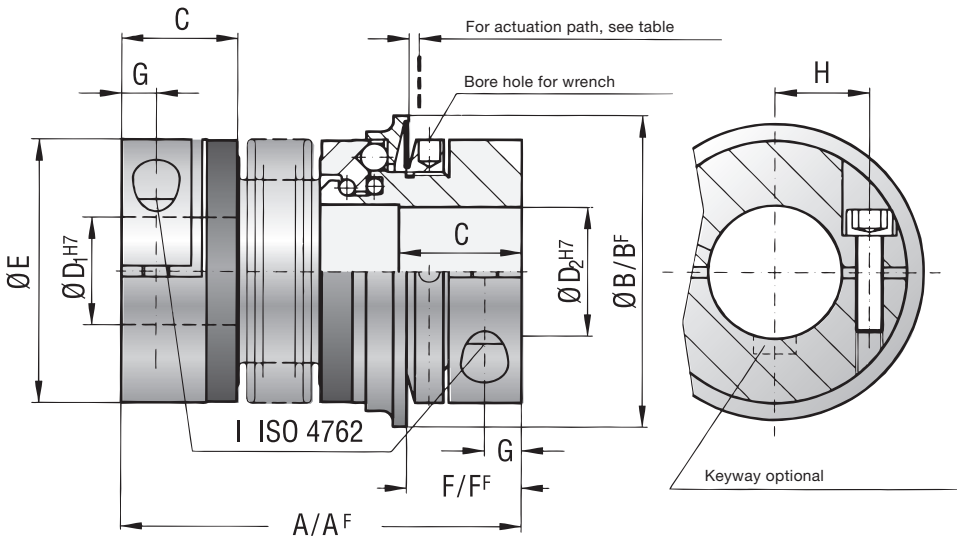

Torque limiter for direct drives

Material:
Bellows made of highly flexible stainless steel. Safety section made of high-strength, hardened steel. Clamping hub material: up to series 80 aluminum and from series 150 steel.

Design:
With clamping hubs and a single lateral screw to ISO 4762.

Temperature range: -30 to +120°C (-22 to 248 °F)

Backlash:
Completely backlash-free as a result of the frictional clamp connection and patented preload.

Service life:
These torque limiters are permanent and maintenance-free as long as the performance limits are not exceeded.

Fit tolerance: Tolerance between shaft and hub 0.01 – 0.05 mm

TL3 – Torque limiter

				Series																	
				15		30		60		150		200		300		500		800		1500	2500
Length options (see ordering code)				A	B	A	B	A	B	A	B	A	B	A	B	A	B	A	B	A	A
Adjustment range from – to (approx. values)	T_{KN}	Nm	A	5–10		10–25		10–30		20–70		30–90		100–200		80–200		400–650		650–850	1500–2000
		in.lb		45-89		89-222		89-266		177-620		266-797		885-1770		708-1770		3540-5753		5753-7523	13275-17700
		Nm	B	8–20		20–40		25–80		45–150		60–160		150–240		200–350		500–800		700–1200	2000–2500
		in.lb		71-177		177-354		222-708		399-1328		531-1416		1328-2124		1770-3098		4425-7080		6195-10620	17700-22125
		Nm	C	–		–		–		80–200		140–280		220–400		300–500		600–900		1000–1800	2300–2800
		in.lb								708-1770		1239-2478		1947-3540		2655-4425		5310-7965		8850-15930	20355-24780
Adjustment range from to (approx. values), full engagement	T_{KN}	Nm	A	7–15		8–20		20–40		20–60		80–140		120–180		60–150		200–400		1000–1250	1400–2200
		in.lb		62-133		71-177		177-354		177-531		708-1239		1062-1593		531-1328		1770-3540		8850-11063	12390-19470
		Nm	B	–		16–30		30–60		40–80		130–200		180–300		100–300		450–800		1250–1500	1800–2700
		in.lb				142-266		266-531		354-708		1151-1770		1593-2655		885-2655		3983-7080		11063-13275	15930-23895
		Nm	C	–		–		–		80–150		–		–		250–500		–		–	–
		in.lb								708-1328						2213-4425					
Overall length	A	mm		62	69	72	80	84	94	93	105	99	111	114	128	123	136	151		175	246
Overall length, full disengagement	A^F	mm		62	69	72	80	84	94	93	105	102	114	117	131	127	140	151		184	252
Actuation ring Ø	B	mm		55		65		73		92		99		120		135		152		174	243
Actuation ring Ø, full disengagement	B^F	mm		62		70		83		98		117		132		155		177		187	258
Fit length	C	mm		19		22		27		32		32		41		41		49		61	80
Inner diameter from Ø to Ø H7	D_1/D_2	mm		10–22		12–23		12–29		15–37		20–44		25–56		25–60		30–60		35–70	50–100
Outer diameter of coupling	E	mm		49		55		66		81		90		110		123		133		157	200
Distance	F	mm		13		16		18		19		19		23		25		31		30	34
Distance, full disengagement	F^F	mm		13		14		17		18		17		20		22		20		26	31
6 x screws to ISO 4017	I			M4		M5		M5		M6		M6		M8		M8		M10		M12	M16
Tightening torque	I	Nm		4		6		8		12		14		18		25		40		70	120
		in.lb		36		54		71		107		124		160		222		354		620	1062
Approx. weight		kg		0.3		0.4		1.2		2.3		3.0		5.0		6.5		9.0		16.3	35
		lb		0.66		0.88		2.65		5.07		6.61		11.0		14.3		19.8		35.9	77.2
Moment of inertia	J	10^{-3} kgm²		0.10	0.15	0.28	0.30	0.75	0.80	1.90	2.00	2.80	3.00	5.50	6.00	11.0	12.8	20.00		42.00	257
		10^{-3} in.lb.s²		0.0885	0.1328	0.2478	0.2655	0.6638	0.7081	1.68	1.77	2.48	2.66	4.87	5.31	9.74	11.3	17.7		37.2	227.5
Torsional rigidity	C_T	10^3 Nm/rad		20	15	39	28	76	55	175	110	191	140	420	350	510	500	780		1304	3400
Lateral misalignment		mm		0.15	0.20	0.20	0.25	0.20	0.25	0.20	0.25	0.25	0.30	0.25	0.30	0.30	0.35	0.35		0.35	0.35
Angular misalignment		degrees		1	1.5	1	1.5	1	1.5	1	1.5	1.5	2	1.5	2	2	2.5	2.5		2.5	2.5
Lateral spring stiffness		N/mm		475	137	900	270	1200	380	1550	435	2040	610	3750	1050	2500	840	2000		3600	6070
Actuation path		mm		1.5		1.5		1.7		1.9		2.2		2.2		2.2		2.2		3	3

A^F, B^F, F^F = Full disengagement version

Torque limiter TL3
With conical clamp connection

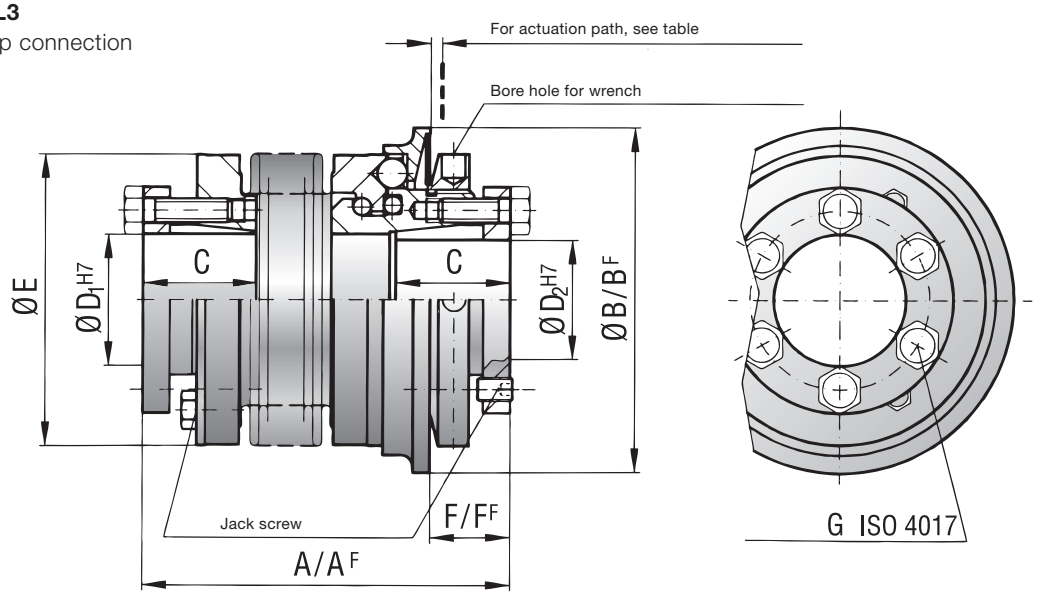

Torque limiter for direct drives

Material:
Bellows made of highly flexible stainless steel. Safety section made of high-strength, hardened steel. Hub material: steel.

Design:
With split conical clamping hubs and captive jack screws.

Temperature range: -30 to +120°C (-22 to 248 °F)

Backlash:
Completely backlash-free as a result of the frictional clamp connection and patented preload.

Service life:
These torque limiters are permanent and maintenance-free as long as the performance limits are not exceeded.

Fit tolerance: Tolerance between shaft and hub 0.01 – 0.05 mm

BC2 – Bellows coupling

			Series																			
			15		30		60		80		150		200		300		500		800	1500
Length options (see ordering code)			A	B	A	B	A	B	A	B	A	B	A	B	A	B	A	B	A	A
Rated torque	T_{KN}	Nm	15		30		60		80		150		200		300		500		800	1500
		in.lb	133		266		531		708		1328		1770		2655		4425		7080	13275
Overall length	A	mm	59	66	69	77	83	93	94	106	95	107	105	117	111	125	133	146	140	166
Outer diameter	B	mm	49		55		66		81		81		90		110		124		134	157
Fit length	C	mm	22		27		31		36		36		41		43		51		45	55
Inner diameter from Ø to Ø H7	D_1/D_2	mm	8–28		10–30		12–32		14–42		19–42		22–45		24–60		35–60		40–75	50–80
Fastening screws to ISO 4762	E		M5		M6		M8		M10		M10		M12		M12		M16		2xM16[a]	2xM20[a]
Tightening torque of fastening screws	E	Nm	8		15		40		50		70		120		130		200		250	470
		in.lb	71		133		354		443		620		1062		1151		1770		2213	4160
Distance between centers	F	mm	17		19		23		27		27		31		39		41		2x48	2x55
Distance	G	mm	6.5		7.5		9.5		11		11		12.5		13		16.5		18	22.5
Moment of inertia	J	10^{-3} kgm²	0.05	0.07	0.12	0.13	0.32	0.35	0.8	0.85	1.9	2	3.2	3.4	7.6	7.9	14.3	14.6	16.2	43.5
		10^{-3} in.lb.s²	0.0443	0.0620	0.1062	0.1151	0.2832	0.3098	0.7081	0.7523	1.68	1.77	2.83	3.01	6.73	6.99	12.66	12.92	14.34	38.50
Hub material (standard) (steel on request)			Al		Al		Al		Al		Steel		Steel		Steel		Steel		Steel	Steel
Approx. weight		kg	0.16		0.26		0.48		0.8		1.85		2.65		4		6.3		5.7	11.5
		lb	0.353		0.573		1.764		1.764		4.079		5.842		8.818		13.889		12.566	25.353
Torsional rigidity	C_T	10^3 Nm/rad	20	15	39	28	76	55	129	85	175	110	191	140	450	350	510	500	780	1304
Axial misalignment 	*max. values*	mm	1	2	1	2	1.5	2	2	3	2	3	2	3	2.5	3.5	2.5	3.5	3.5	3.5
Lateral misalignment 	*max. values*	mm	0.15	0.2	0.2	0.25	0.2	0.25	0.2	0.25	0.2	0.25	0.25	0.3	0.25	0.3	0.3	0.35	0.35	0.35
Axial spring stiffness	C_a	N/mm	25	15	50	30	72	48	48	32	82	52	90	60	105	71	70	48	100	320
Lateral spring stiffness	C_r	N/mm	475	137	900	270	1200	420	920	290	1550	435	2040	610	3750	1050	2500	840	2000	3600

[a] Two screws per clamping hub, 180° apart
Max. angular misalignment 1.5°

Bellows coupling BC2
With clamping hub

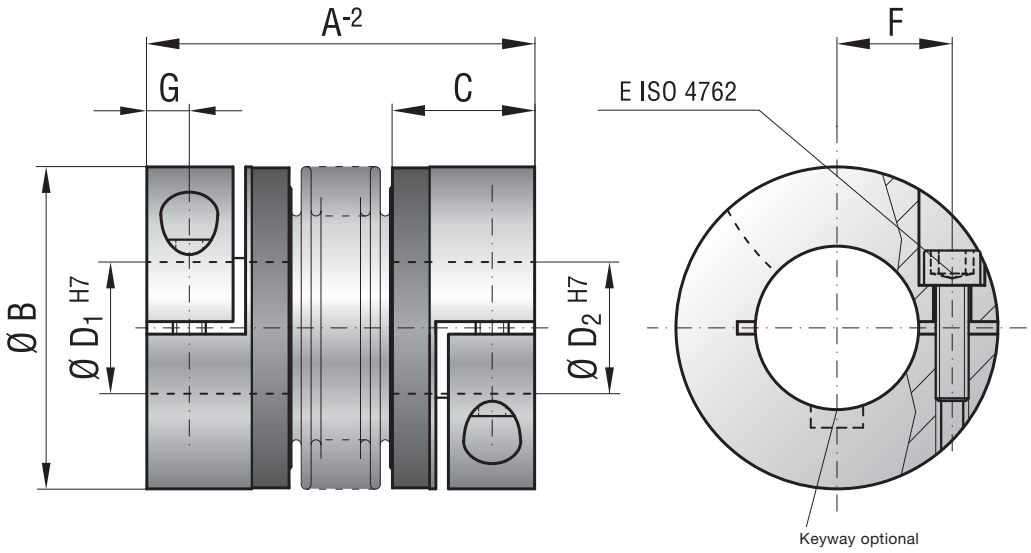

Bellows coupling for direct drives

Material:
Bellows made of highly flexible stainless steel. Hub material: see table below.

Design:
With clamping hubs and a single lateral screw to ISO 4762. Any imbalance of the clamping hubs due to the design is compensated by balancing bores located on the hub interior.

Temperature range: -30 to +120°C (-22 to 248 °F)

Backlash:
Completely backlash-free as a result of the frictional clamp connection.

Service life:
These torque limiters are permanent and maintenance-free as long as the performance limits are not exceeded.

Fit tolerance: Tolerance between shaft and hub 0.01 – 0.05 mm

Speeds:
Up to 10,000 rpm / in excess of 10,000 rpm with finely balanced version.

Brief overload: Acceptable up to 1.5 times the value specified.

BC3 – Bellows coupling

			Series																			
			15		30		60		150		200		300		500		800	1500	4000	6000	10000
Length options (see ordering code)			A	B	A	B	A	B	A	B	A	B	A	B	A	B	A	A	A	A	A
Rated torque	T_{KN}	Nm	15		30		60		150		200		300		500		800	1500	4000	6000	10000
		in.lb	133		266		531		1328		1770		2655		4425		7080	13275	35400	53100	88500
Overall length without screw head	*A*	mm	48	55	57	65	66	76	75	87	78	90	89	103	97	110	114	141	195	210	217
Outer diameter	*B*	mm	49		55		66		81		90		110		124		133	157	200	253	303
Fit length	*C*	mm	19		22		27		32		32		41		41		50	61	80	85	92
Inner diameter from Ø to Ø H7	D_1/D_2	mm	10–22		12–23		12–29		15–38		15–44		24–56		24–60		30–60	35–70	50–100	60–140	70–180
6 x fastening screws to ISO 4017	*E*		M4		M5		M5		M6		M6		M8		M8		M10	M12	M16	M16	8xM16
Tightening torque of fastening screws	*E*	Nm	4		6		8		12		14		18		25		40	70	120	150	160
		in.lb	36		54		71		107		124		160		222		354	620	1062	1328	1416
3 x jack screws to ISO 4017	*F*		M4		M4		M5		M5		M6		M6		M6		M6	6xM8	6xM10	6xM10	8xM10
Outer diameter of hub	*G*	mm	49		55		66		81		90		110		122		116	135	180	246	295
Moment of inertia	*J*	10^{-3} kgm²	0.12	0.59	0.3	0.34	0.54	0.73	1.2	1.6	1.7	2.5	5.1	5.9	9.1	9.9	13.2	34.9	85.5	254	629
		10^{-3} in.lb.s²	0.1062	0.5222	0.2655	0.3009	0.4779	0.6461	1.06	1.41	1.50	2.21	4.51	5.22	8.05	8.76	11.7	30.9	75.7	224.8	556.7
Approx. weight		kg	0.25		0.4		0.8		1.2		1.8		3		4.2		5.6	8.2	23	32.6	45.5
		lb	0.551		0.882		1.76		2.65		3.97		6.61		9.33		12.3	18.1	50.7	71.9	100.3
Torsional rigidity	C_T	10^3 Nm/rad	20	15	39	28	76	55	175	110	191	140	450	350	510	500	780	1304	3400	5700	10950
Axial misalignment	*max. values*	mm	1	2	1	2	1.5	2	2	3	2	3	2.5	3.5	2.5	3.5	3.5	3.5	3.5	3	3
Lateral misalignment	*max. values*	mm	0.15	0.2	0.2	0.25	0.2	0.25	0.2	0.25	0.25	0.3	0.25	0.3	0.3	0.35	0.35	0.35	0.4	0.4	0.4
Axial spring stiffness	C_a	N/mm	25	15	50	30	72	48	82	52	90	60	105	71	70	48	100	320	565	1030	985
Lateral spring stiffness	C_r	N/mm	475	137	900	270	1200	420	1500	435	2040	610	3750	1050	2500	840	2000	3600	6070	19200	21800

Max. angular misalignment 1.5°

Bellows coupling BC3
With conical connection

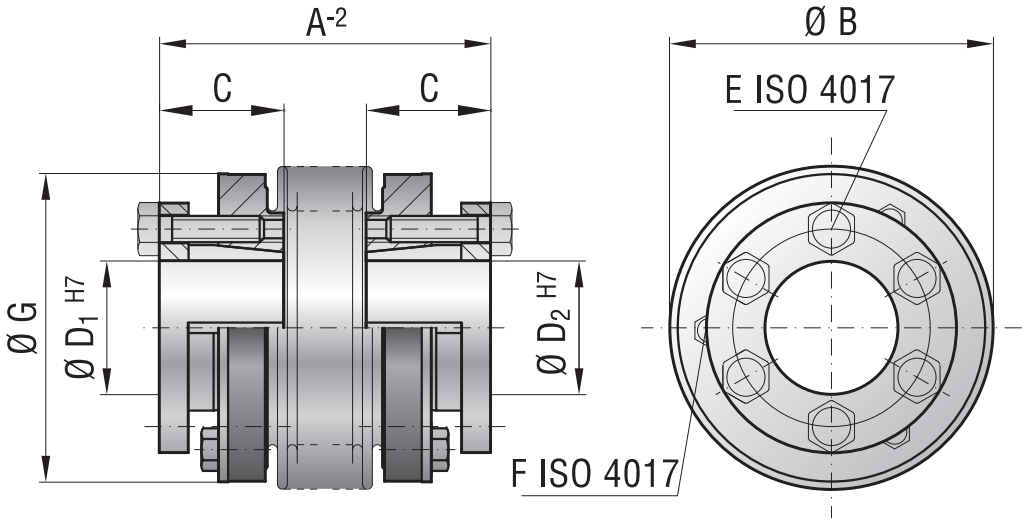

Bellows coupling for direct drives

Material:
Bellows made of highly flexible stainless steel. Hub material: steel.

Design:
With split conical clamping hubs and strong, captive jack screws to ISO 4017.

Temperature range: -30 to +120°C (-22 to 248°F)

Backlash:
Completely backlash-free as a result of the frictional clamp connection.

Service life:
These torque limiters are permanent and maintenance-free as long as the performance limits are not exceeded.

Fit tolerance: Tolerance between shaft and hub 0.01 – 0.05 mm

Speeds:
Up to 10000 rpm / in excess of 10000 rpm with finely balanced version.

Brief overload: Acceptable up to 1.5 times the value specified.

BCT – Bellows coupling

			Series				
			15	**60**	**150**	**300**	**1500**
Gearhead output type			TP004	TP010	TP025	TP050	TP110
Centering diameter	D_2	mm	40 h7	63 h7	80 h7	100 h7	160 h7
TP flange hole circle diameter / thread	D_3	mm	31.5 8 x M5	50 8 x M6	63 12 x M6	80 12 x M8	125 12 x M10
Nominal torque	T_{KN}	Nm	40	140	220	400	1570
		in.lb	354	1239	1947	3540	13895
Length 2	A_1	mm	49	67	72	90	140
Length installation space 2	A_2	mm	68	97	101	128	190
Hub diameter	B_1	mm	49	66	82	110	157
Flange diameter	B_2	mm	63.5	86.5	108	132	188
Fit length	C_1	mm	16.5	23	27.5	34	55
Possible inner diameter from Ø to Ø H7	D_1	mm	12 - 28	14 - 35	19 - 42	24 - 60	50 - 80
Hole circle diameter / Thread	DL	mm	56.5 10 x M4	76 10 x M5	97 10 x M6	120 12 x M6	170 16 x M8
Screws to ISO 4762	E		1 x M5	1 x M8	1 x M10	1 x M12	2 x M20
Tightening torque of fastening screw	E	Nm	8	45	80	120	470
		in.lb	71	399	708	1062	4160
Distance	G	mm	6.5	9.5	11	13	22.5
Approx. weight	I	kg	0.3	0.7	1	2.8	10
		lb	0.67	1.55	2.21	6.18	22.05
Moment of inertia	J	10^{-3} kgm²	0.15	0.65	1.3	5.5	45
		10^{-3} in.lb.s²	0.14	0.58	1.16	4.87	39.83
Axial misalignment 	Max. values mm		1	1.5	2	2.5	3
Lateral misalignment 	Max. values mm		0.25	0.25	0.25	0.25	0.2

Max. angular misalignment 1°

Low backlash metal bellows coupling BCT
With flange connection

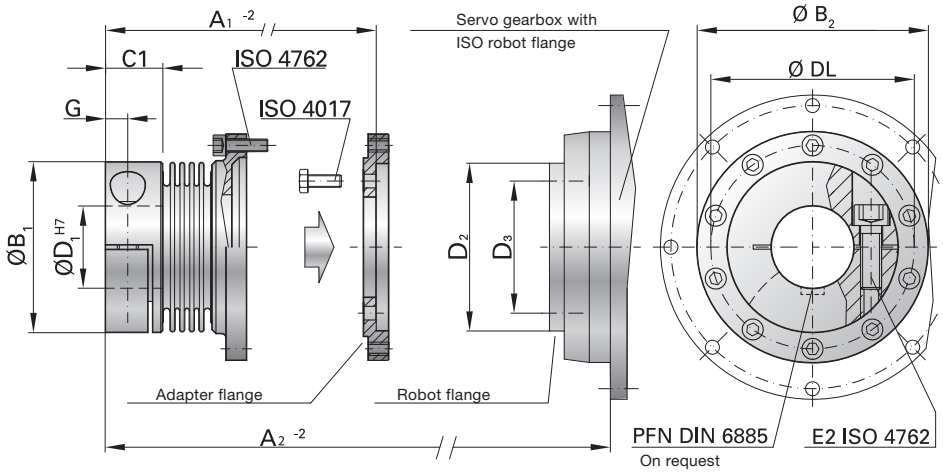

Installation and removal

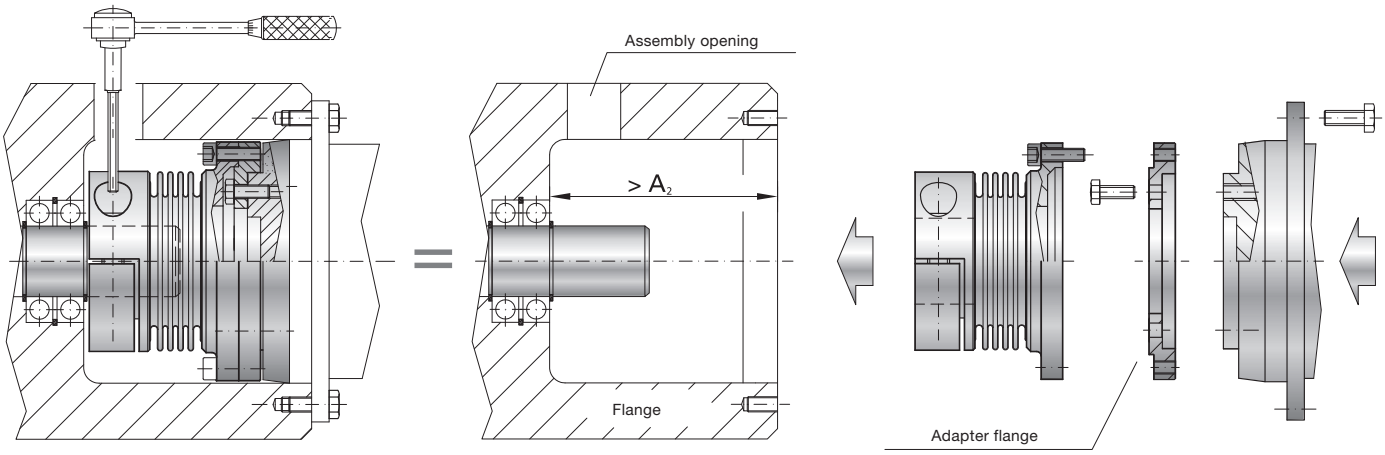

Bellows coupling for direct drives

Material:
Hub: Series 15-150 high-strength alu,
Series: 300-1500 steel,
Bellows: High-strength stainless steel,
Adapter flange: Steel

Design:
Load side: With clamping hubs and a single lateral screw to ISO 4762.
Gearbox side: With flange connection and separate adapter flange.

Temperature range: -30 to +120°C, (-22 to 248°F)

Fit tolerance: Tolerance between shaft and hub 0.01 – 0.05 mm

Speeds:
Up to 10000 rpm

Non-standard applications:
Custom designs with different tolerances, keyways, non-standard material, bellows are available at short notice.

EC2 – Bellows coupling

			Series												
			2	4.5	10	15	30	60	80	150		300		500	
Length options see ordering code			A	A	A	A	A	A	A	A	B	A	B	A	B
Rated torque	T_{KN}	Nm	2	4.5	10	15	30	60	80	150		300		500	
		in.lb	18	40	89	133	266	531	708	1328		2655		4425	
Overall length	A	mm	30	40	44	58	68	79	92	92		109		114	
Outer diameter	B	mm	25	32	40	49	56	66	82	82		110		123	
Fit length	C	mm	10.5	13	13	21.5	26	28	32.5	32.5		41		42.5	
Inner diameter from Ø to Ø H7	D_1/D_2	mm	4–12.7	6–16	6–24	8–28	12–32	14–35	16–42	19–42		24–60		35–62	
Fastening screws to ISO 4762	E		M3	M4	M4	M5	M6	M8	M10	M10		M12		M16	
Tightening torque of fastening screw	E	Nm	2.3	4	4.5	8	15	40	70	85		120		200	
		in.lb	21	36	40	71	133	354	620	753		1062		1770	
Distance between centers	F	mm	8	11	14	17	20	23	27	27		39		41	
Distance	G	mm	4	5	5	6.5	7.5	9.5	11	11		13		17	
Moment of inertia	J	10^{-3} kgm²	0.002	0.007	0.016	0.065	0.12	0.3	0.75	1.8	0.8	7.5	3.8	11.7	4.9
		10^{-3} in.lb.s²	0.0018	0.0062	0.0142	0.0575	0.1062	0.2655	0.6638	1.59	0.71	6.64	3.36	10.36	4.34
Hub material			Al	Al	Al	Al	Al	Al	Al	Steel	Al	Steel	Al	Steel	Al
Approx. weight		kg	0.02	0.05	0.06	0.16	0.25	0.4	0.7	1.7	0.75	3.8	1.6	4.9	2.1
		lb	0.044	0.110	0.132	0.353	0.551	0.882	1.54	3.75	1.65	8.38	3.53	10.80	4.63
Torsional rigidity	C_T	10^3 Nm/rad	1.5	7	9	23	31	72	80	141		157		290	
Axial misalignment 	*max. values*	mm	0.5	1	1	1	1	1.5	2	2		2		2.5	
Lateral misalignment 	*max. values*	mm	0.2	0.2	0.2	0.2	0.2	0.2	0.2	0.2		0.2		0.2	
Axial spring stiffness	C_a	N/mm	8	35	30	30	50	67	44	77		112		72	
Lateral spring stiffness	C_r	N/mm	50	350	320	315	366	679	590	960		2940		1450	

Max. angular misalignment 1°

Bellows coupling EC2
With clamping hub

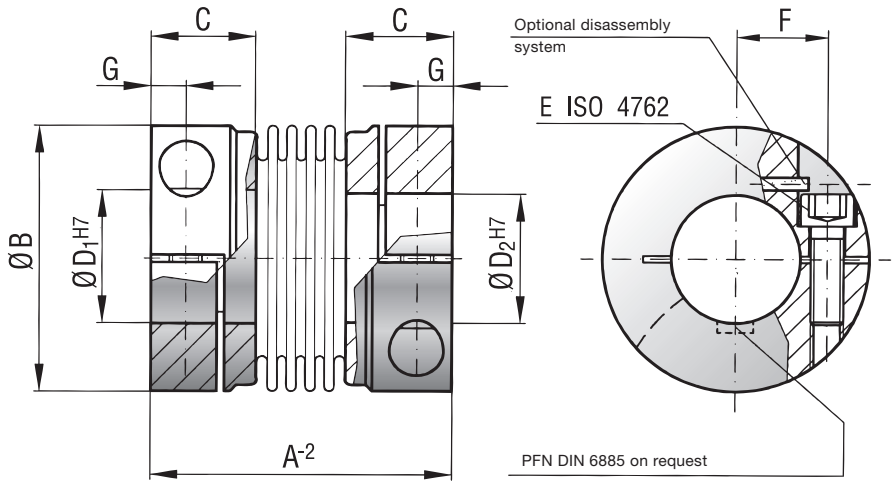

Bellows coupling for direct drives

Material:
Bellows made of highly flexible stainless steel. Hub material: see table below.

Design:
With clamping hubs and a single lateral screw to ISO 4762.

Temperature range: -30 to +100°C (-22 to 212°F)

Backlash:
Completely backlash-free as a result of the frictional clamp connection.

Service life:
These torque limiters are permanent and maintenance-free as long as the performance limits are not exceeded.

Fit tolerance: Tolerance between shaft and hub 0.01 – 0.05 mm

Optional self-opening clamp system:
For expanding the bore hole during assembly or dismantling.

Torque adjusting wrench for DIN 1816 nuts

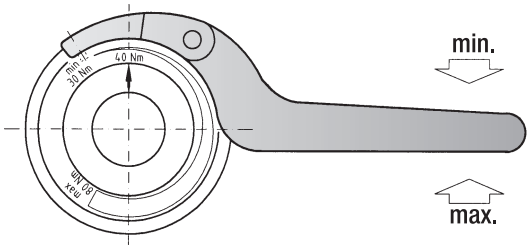

Smaller coupling sizes do not require a torque adjusting wrench. The adjusting nuts for the 1.5 / 2 / 4.5 / 10 series can be adjusted with a bolt or pin.

Series			Torque adjusting wrench
15			AC 20022992
20/30	40/60	80/150	AC 20022993
200			AC 20022994
300			AC 20022995
500			AC 20022996
800	1500	2500	AC 20022997

Mechanical limit switch (emergency cut-off)

Dimension drawings

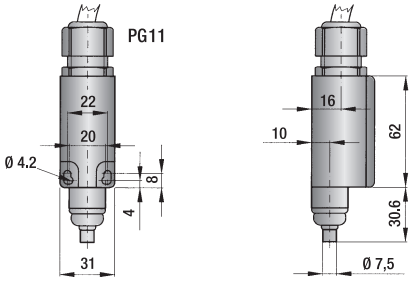

Important:
Always carry out a 100 % test of the switch function after assembly.

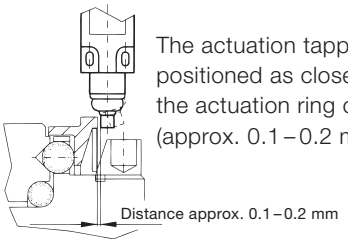

The actuation tappet should be positioned as close as possible to the actuation ring of the torque limiter (approx. 0.1 – 0.2 mm).

Technical data	
Max. voltage:	500 V AC
Max. constant current:	10 A
Degree of protection:	IP 65
Contact type:	NC contact (positive opening)
Ambient temperature:	-30 to +80 ‹C
Actuation:	Tappet (metal)
Circuit symbol:	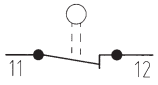

The mechanical limit switch is suitable for size 30 and above.

Proximity switch (emergency cut-off)

Dimension drawings

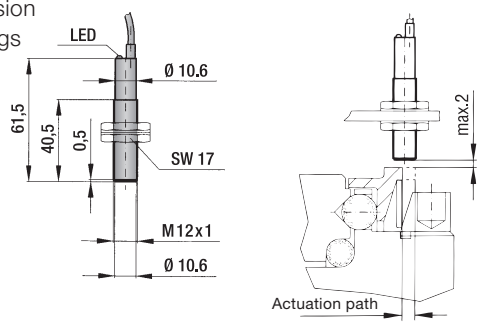

Important:
Always carry out a 100 % test of the switch function after assembly.

Technical data	
Voltage range:	10 to 30 V DC
Max. output current:	200 mA
Max. switching frequency:	800 Hz
Temperature range:	-25 to +70 °C
Degree of protection:	IP 67
Switch type:	PNP NC contact
Detection gap:	max. 2 mm
Circuit symbol:	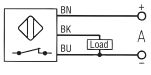

Assembly instructions for low backlash **torque limiters**

For the TL 1 – TL 3 models, the fit tolerance between the shaft and hub must be between 0.01 and 0.05 mm. Ensure that the coupling hub mounts smoothly on the shaft prior to assembly. Lightly oil the shaft prior to assembly. Do not use oils or grease with sliding additives (for example, MoS_2). Any keyways in the shaft will not affect the functioning of the clamp connection.

Model TL1 has an integrated **bearing (1)** for the attached component (for example, a pulley or sprocket wheel). Do not exceed the **maximum radial force (2)**, (see table). By centering the load between the **dimension (S)**, sufficient force is applied between the two balls and no separate bearings are required. Additional bearings are required for offset mounting. This is recommended, for example, if the attached component has a very small diameter or a very large width. Ball bearings, needle bearings or bushings can be used depending on the installation situation.

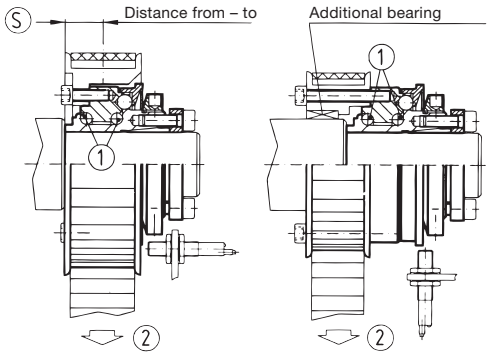

Series	1.5	2	4.5	10	15	30	60	150	200	300	500	800	1500	2500
Max. radial load capacity (N)	50	100	200	500	1400	1800	2300	3000	3500	4500	5600	8000	12000	20000
(S) from – to	3–6	5–8	5–11	6–14	7–17	10–24	10–24	12–24	12–26	12–28	16–38	16–42	20–50	28–60

Adjustment of the disengagement torque

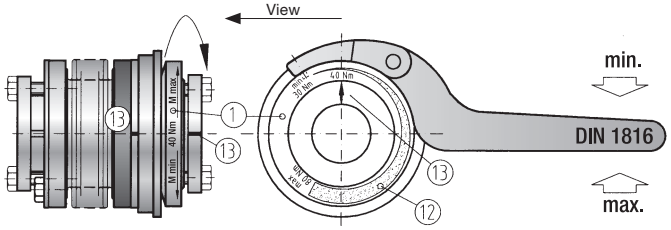

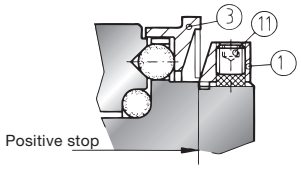

① Adjustment nut
⑪ Locking screw
③ Steel actuation ring
⑫ Adjustment range
⑬ Marking

WITTENSTEIN alpha torque limiters are factory adjusted to the specified disengagement torque, which is marked on the coupling. The adjustment range (min./max.) is indicated on the **adjustment nut (1)**. The customer can adjust the disengagement torque infinitely within the **adjustment range (12)** by varying the pretension of the disc springs. The adjustment range must not be exceeded during the adjustment process. After loosening the **lock screw (11)**, the disengagement torque can be adjusted using a suitable tool, e.g. a torque adjusting wrench to DIN 1816. The three locking screws (11) should then be tightened again.

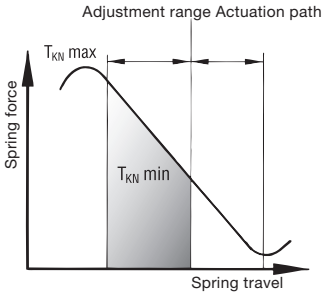

Important!

WITTENSTEIN alpha torque limiters incorporate disc springs with special spring characteristics. Never exceed the max./min. range of the disengagement torque, which is located along the downward slope of this characteristic curve.

Important information

$$T_{AN} \geq \alpha \cdot J_L + T_{AW} \geq \left[\frac{J_L}{J_A + J_L} \cdot (T_{AS} - T_{AR}) + T_{AR}\right] \cdot S_A \text{ [Nm]}$$

$$T_{2m} = \sqrt[1]{\frac{|n_{2b}| \cdot t_b \cdot |T_{2b}|^3 + \ldots + |n_{2n}| \cdot t_n \cdot |T_{2n}|^3}{|n_{2b}| \cdot t_b + \ldots + |n_{2n}| \cdot t_n}}$$

Read the following pages for information on quick selection, configuration, design and handling of your WITTENSTEIN alpha gearhead.

Information

Details



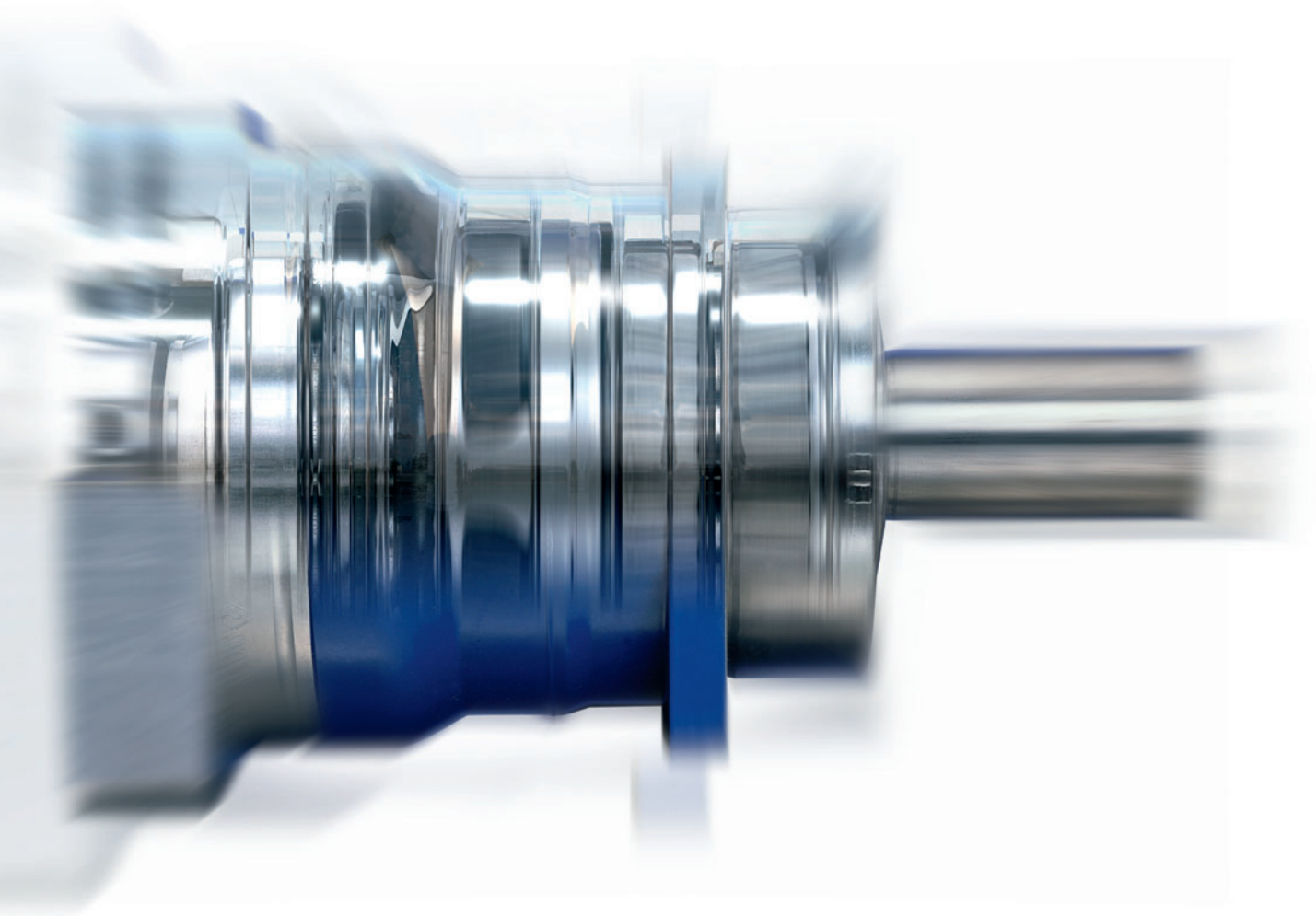

Quick **gearhead selection**

The quick gearhead selection feature is designed exclusively for calculating gearhead sizes approximately. Quick selection is not a substitute for the detailed design feature! To select a specific gearhead, proceed as described in the Chapter „Gearhead – Detailed design“ or „V-DRIVE® – Detailed design“. For quick, convenient and reliable gearhead selection, we recommend using WITTENSTEIN alpha's cymex® design software.

Cyclic operation S5 Valid for ≤ 1000 cycles/hour Duty cycle < 60 % and < 20 min.[a)]	1. Calculate the max. motor acceleration torque using motor data **T_{MaxMot} [Nm] or [in.lb]** 2. Calculate the max. available acceleration torque at the gearhead output T_{2b} [Nm] or [in.lb] **$T_{2b} = T_{MaxMot} \cdot i$** 3. Compare the max. available acceleration torque T_{2b} [Nm] or [in.lb] with the max. permissible acceleration torque T_{2B} [Nm] or [in.lb] at the gearhead output **$T_{2b} \leq T_{2B}$**	4. Compare the bore hole diameter on the clamping hub (see technical data sheets) 5. Compare the motor shaft length L_{Mot} [mm] or [in] with the min. and max. dimensions in the corresponding dimension sheet
Continuous operation S1 Duty cycle ≥ 60 % or ≥ 20 min.[a)]	1. Select cyclic operation S5 2. Calculate the rated motor torque **T_{1NMot} [Nm] or [in.lb]** 3. Calculate the previous rated torque at the gearhead output T_{2n} [Nm] or [in.lb] **$T_{2n} = T_{1NMot} \cdot i$**	4. Compare the previous rated torque T_{2n} [Nm] or [in.lb] with the permissible nominal torque T_{2N} [Nm] or [in.lb] at the gearhead output **$T_{2n} \leq T_{2N}$** 5. Calculate the previous input speed **n_{1n} [rpm]** 6. Compare the previous input speed n_{1n} [rpm] with the permissible rated speed n_{1N} [rpm] **$n_{1n} \leq n_{1N}$**

[a)] recommended by WITTENSTEIN alpha. Please contact us if you require further assistance.

Cyclic operation **S5** and continuous operation **S1**

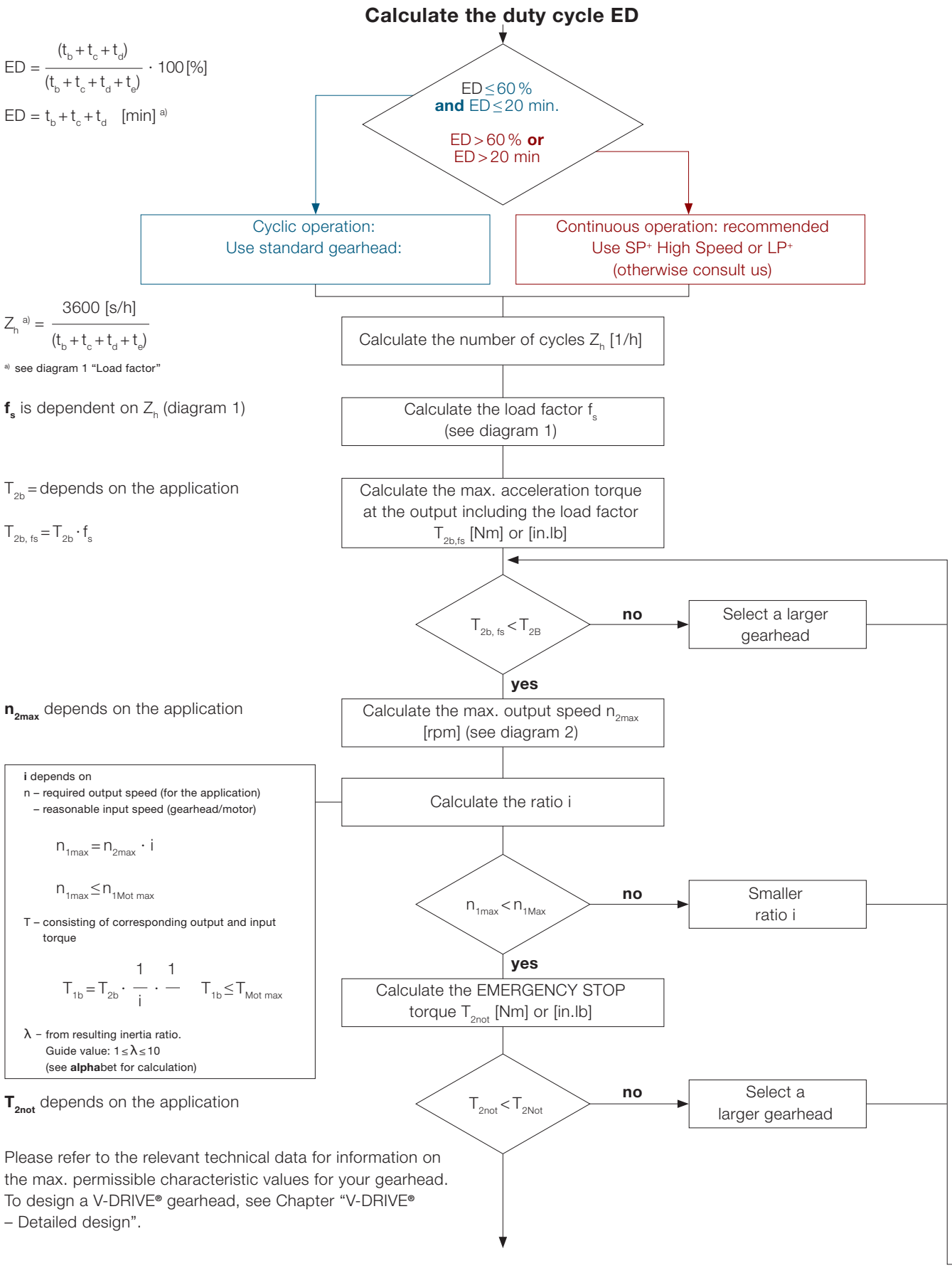

Please refer to the relevant technical data for information on the max. permissible characteristic values for your gearhead. To design a V-DRIVE® gearhead, see Chapter "V-DRIVE® – Detailed design".

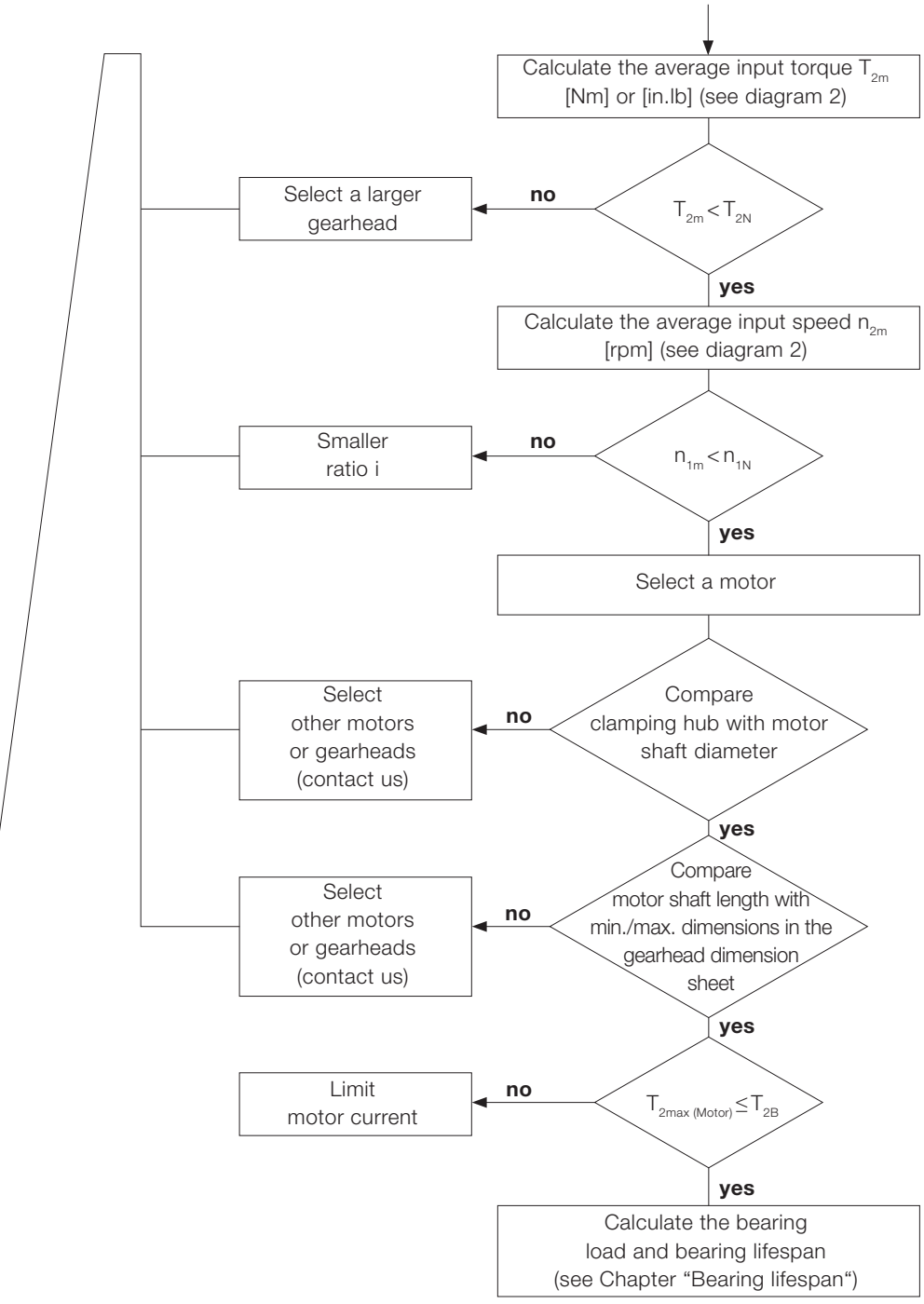

$$T_{2m} = \sqrt[3]{\frac{|n_{2b}| \cdot t_b \cdot |T_{2b}|^3 + \ldots + |n_{2n}| \cdot t_n \cdot |T_{2n}|^3}{|n_{2b}| \cdot t_b + \ldots + |n_{2n}| \cdot t_n}}$$

$$n_{2m} = \frac{|n_{2b}| \cdot t_b + \ldots + |n_{2n}| \cdot t_n}{t_b + \ldots + t_n}$$ incl. pause time

$$n_{1m} = n_{2m} \cdot i$$

$$D_{W,\,Mot} \leq D_{clamping\ hub}$$

The motor shaft must be inserted far enough into the clamping hub.

1. The motor shaft must protrude far enough into the clamping hub without making contact.

$$T_{2max\ (Motor)} = T_{1max\ (Motor)} \cdot i \cdot \eta_{gearhead}$$

2. The gearhead should not be damaged when the motor operates at full load, limit the motor current if necessary.

Diagram 1
Large number of cycles combined with short acceleration times may cause the drive train to vibrate. Use the load factor f_s to include the resulting excess torque values in calculations.

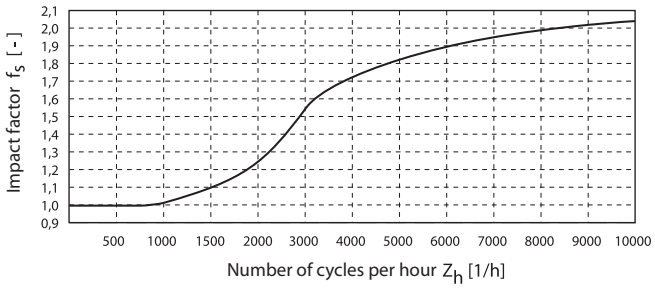

Diagram 2
Standard collective load at output
If the load on the gearhead in continuous operation S1 is less than or equal to the rated torque T_{2N}, the gearing is. At input speeds less than/equal to the rated speed n_{1N}, the temperature of the gearhead will not exceed 90 °C under average ambient conditions.

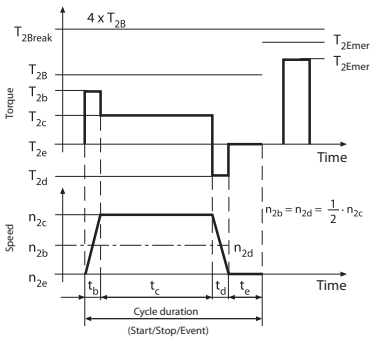

Bearing lifespan L_{h10} (output bearing)

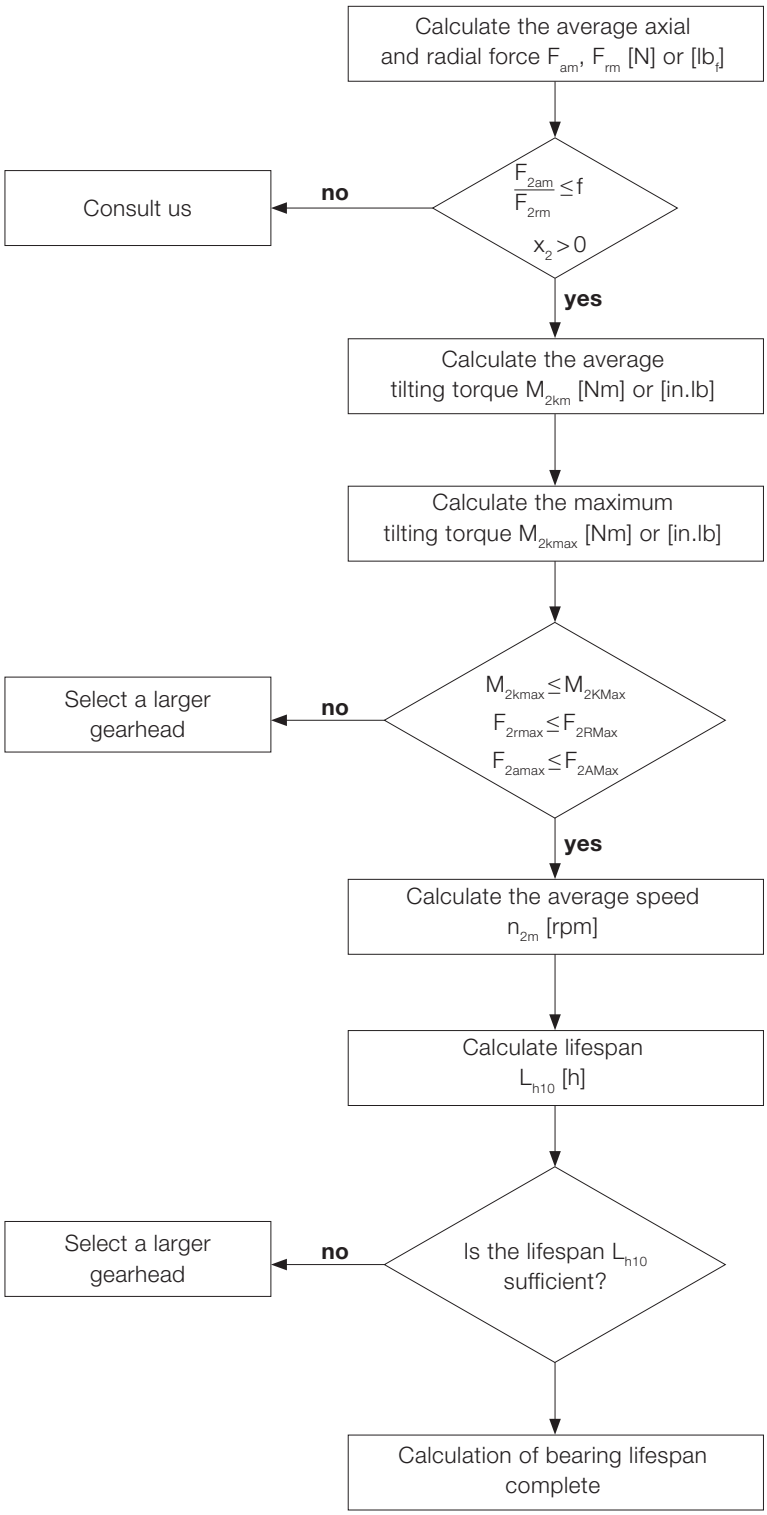

$$F_{2am} = \sqrt[3]{\frac{|n_{2b}| \cdot t_b \cdot |F_{2ab}|^3 + \ldots + |n_{2n}| \cdot t_n| \cdot F_{2an}|^3}{|n_{2b}| \cdot t_b + \ldots + |n_{2n}| \cdot t_n}}$$

$$F_{2rm} = \sqrt[3]{\frac{|n_{2b}| \cdot t_b \cdot |F_{2rb}|^3 + \ldots + |n_{2n}| \cdot t_n| \cdot F_{2rn}|^3}{|n_{2b}| \cdot t_b + \ldots + |n_{2n}| \cdot t_n}}$$

$$M_{2km} = \frac{F_{2am} \cdot y_2 + F_{2rm} \cdot (x_2 + z_2)}{W}$$ [a)]

$$M_{2kmax} = \frac{F_{2amax} \cdot y_2 + F_{2rmax} \cdot (x_2 + z_2)}{W}$$ [a)]

[a)] x_2, y_2, z_2 in mm or in

$$n_{2m} = \frac{n_{2b} \cdot t_b + \ldots + n_{2n} \cdot t_n}{t_b + \ldots + t_n}$$

$$L_{h10} = \frac{16666}{n_{2m}} \cdot \left[\frac{K1_2}{M_{2km}} \right]^{p_2}$$

	metric	inch
W	1000	1

	TP+/TPK+	SP+/SPK+	LP+/LPB+ LPK+	alphira® (CP)
f	0.37	0.40	0.24	0.24

LP+/LPB+/LPK+		050	070	090	120	155
z_2	[mm]	20	28.5	31	40	47
	[in]	0.79	1.12	1.22	1.58	1.85
$K1_2$	[Nm]	75	252	314	876	1728
	[in.lb]	664	2230	2779	7753	15293
p_2		3	3	3	3	3

Example with output shaft and flange:

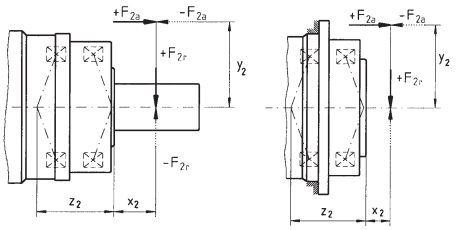

alphira® (CP)		040	060	080	115
z_2	[mm]	12.5	19.5	23.5	28.5
	[in]	0.49	0.77	0.93	1.12
$K1_2$	[Nm]	15.7	70.0	157.0	255.0
	[in.lb]	139	620	1389	2257
p_2		3	3	3	3

SP+/SPK+		060	075	100	140	180	210	240
z_2	[mm]	42.2	44.8	50.5	63.0	79.2	94.0	99.0
	[in]	1.66	1.76	1.99	2.48	3.12	3.70	3.90
$K1_2$	[Nm]	795	1109	1894	3854	9456	15554	19521
	[in.lb]	7036	9815	16762	34108	83686	137653	172761
p_2		3.33	3.33	3.33	3.33	3.33	3.33	3.33

TP+/TPK+		004	010	025	050	110	TP300	TP500
z_2	[mm]	57.6	82.7	94.5	81.2	106.8	140.6	157
	[in]	2.27	3.26	3.72	3.20	4.21	5.48	6.12
$K1_2$	[Nm]	536	1325	1896	4048	9839	18895	27251
	[in.lb]	4744	11726	16780	35825	87075	167220	241171
p_2		3.33	3.33	3.33	3.33	3.33	3.33	3.33

TK+/SK+/HG+/LK+: Calculation using cymex®.
Please contact us for further information.

Cyclic operation **S5** and continuous operation **S1**

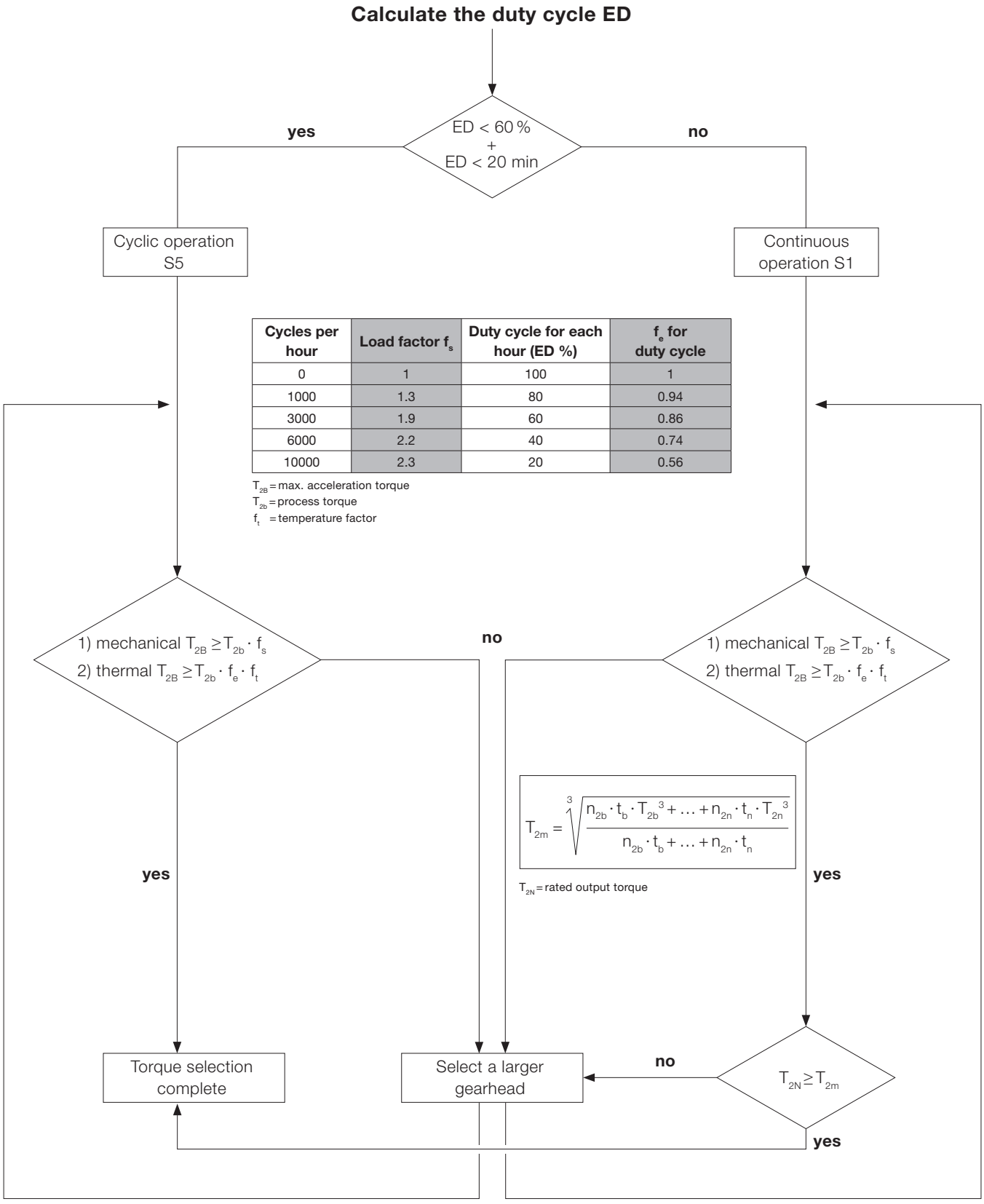

Cycles per hour	Load factor f_s	Duty cycle for each hour (ED %)	f_e for duty cycle
0	1	100	1
1000	1.3	80	0.94
3000	1.9	60	0.86
6000	2.2	40	0.74
10000	2.3	20	0.56

T_{2B} = max. acceleration torque
T_{2b} = process torque
f_t = temperature factor

Speed/Torque

			VDT/VDH/VDS 050 n_{1Max} = 6000 rpm						VDT/VDH/VDS 063 n_{1Max} = 4500 rpm					
Ratio	***i***		**4**	**7**	**10**	**16**	**28**	**40**	**4**	**7**	**10**	**16**	**28**	**40**
	T_{2Not}	Nm	230	242	242	250	262	236	460	484	491	494	518	447
		in.lb	2036	2142	2142	2213	2319	2089	4071	4283	4345	4372	4584	3956
n_1 = 500 rpm	T_{2N}	Nm	39	52	54	59	65	54	120	155	164	174	200	175
		in.lb	345	460	478	522	5759	478	1062	1372	1451	1540	1770	1549
	T_{2B}	Nm	54	71	74	81	90	74	164	213	225	238	274	240
		in.lb	478	628	655	717	797	655	1451	1885	1991	2106	2425	2124
	η	%	92	89	86	82	72	64	93	91	88	83	74	68
	f_t [a]		0.53	0.53	0.53	0.53	0.53	0.53	0.53	0.53	0.53	0.53	0.53	0.53
n_1 = 1000 rpm	T_{2N}	Nm	43	56	59	64	71	59	128	166	175	185	214	189
		in.lb	381	496	522	566	628	522	1133	1469	1549	1637	1894	1673
	T_{2B}	Nm	58	76	80	88	97	81	176	227	240	254	293	259
		in.lb	513	673	708	779	858	717	1558	2009	2124	2248	2593	2292
	η	%	94	91	89	85	77	69	94	93	91	86	78	73
	f_t [a]		0.53	0.53	0.53	0.53	0.53	0.53	0.53	0.53	0.53	0.56	0.65	0.57
n_1 = 2000 rpm	T_{2N}	Nm	44	57	60	65	72	60	124	163	176	186	199	190
		in.lb	389	504	531	575	637	531	1097	1443	1558	1646	1761	1682
	T_{2B}	Nm	60	78	82	89	99	83	179	224	241	255	272	260
		in.lb	531	690	726	788	876	735	1584	1982	2133	2257	2407	2301
	η %	%	95	93	91	88	75	75	96	94	93	89	83	78
	f_t [a]		0.53	0.53	0.53	0.56	0.61	0.53	0.76	0.95	0.94	0.99	1.06	1.01
n_1 = 3000 rpm	T_{2N}	Nm	43	56	59	64	71	59	87	124	141	152	165	159
		in.lb	381	496	522	566	628	522	770	1097	1248	1345	1460	1407
	T_{2B}	Nm	59	77	81	88	97	81	138	176	194	209	224	217
		in.lb	522	681	717	779	858	717	1221	1558	1717	1850	1982	1920
	η	%	96	94	93	90	83	78	96	95	94	91	85	81
	f_t [a]		0.57	0.75	0.78	0.86	0.95	0.79	1.00	1.11	1.23	1.32	1.42	1.38
n_1 = 4000 rpm	T_{2N}	Nm	37	52	58	63	70	58	64	96	116	128	139	136
		in.lb	327	460	513	558	620	513	566	850	1027	1133	1230	1204
	T_{2B}	Nm	58	76	79	87	96	80	109	143	160	175	190	187
		in.lb	513	673	699	770	850	708	965	1266	1416	1549	1682	1655
	η	%	96	95	93	91	85	80	97	96	94	92	86	83
	f_t [a]		0.89	1.16	1.22	1.16	1.28	1.23	1.44	1.56	1.74	1.90	2.07	2.03

[a] f_t: Cyclic and continuous operation (see left page)

			VDT/VDH/VDS 080 n_{1Max} = 4000 rpm						VDT/VDH/VDS 100 n_{1Max} = 3500 rpm					
Ratio	***i***		**4**	**7**	**10**	**16**	**28**	**40**	**4**	**7**	**10**	**16**	**28**	**40**
	T_{2Not}	Nm	938	993	963	1005	1064	941	1819	1932	1940	1955	2073	1856
		in.lb	8301	8788	8523	8894	9416	8328	16098	17098	17169	17302	18346	16426
n_1 = 500 rpm	T_{2N}	Nm	342	438	448	494	558	461	843	952	980	992	1072	980
		in.lb	3027	3876	3965	4372	4938	4080	7461	8425	8673	8779	9487	8673
	T_{2B}	Nm	469	601	613	677	764	631	1155	1304	1343	1359	1469	1343
		in.lb	4151	5319	5425	5991	6761	5584	10222	11540	11886	12027	13001	11886
	η	%	94	92	89	86	77	70	95	93	91	87	80	76
	f_t [a]		0.53	0.53	0.54	0.57	0.64	0.53	0.62	0.70	0.72	0.73	0.79	0.69
n_1 = 1000 rpm	T_{2N}	Nm	358	419	410	456	486	427	644	762	799	813	892	828
		in.lb	3168	3708	3629	4036	4301	3779	5699	6744	7071	7195	7894	7328
	T_{2B}	Nm	491	574	561	625	665	584	883	1044	1095	1113	1221	1134
		in.lb	4345	5080	4965	5531	5885	5168	7815	9239	9691	9850	10806	10036
	η	%	95	93	91	88	81	74	95	94	92	88	82	79
	f_t [a]		0.70	0.82	0.80	0.83	0.88	0.78	0.79	0.93	0.98	0.99	1.09	0.94
n_1 = 2000 rpm	T_{2N}	Nm	226	303	300	348	373	327	390	533	575	591	663	629
		in.lb	2000	2682	2655	3080	3301	2894	3452	4717	5089	5230	5868	5567
	T_{2B}	Nm	335	415	411	476	511	448	581	730	788	810	908	862
		in.lb	2965	3673	3637	4213	4522	3965	5142	6461	6974	7169	8036	7629
	η	%	96	95	93	89	84	79	96	95	94	91	86	82
	f_t [a]	%	0.90	1.12	1.10	1.28	1.37	1.20	1.18	1.30	1.40	1.44	1.62	1.53
n_1 = 3000 rpm	T_{2N}	Nm	155	224	233	278	301	264	261	384	443	459	524	505
		in.lb	1372	1982	2062	2460	2664	2336	2310	3398	3921	4062	4637	4469
	T_{2B}	Nm	247	320	319	381	413	362	420	551	606	629	718	692
		in.lb	2186	2832	2832	3372	3655	3204	3717	4876	5363	5567	6354	6124
	η	%	97	96	94	92	86	81	97	96	95	92	87	84
	f_t [a]		1.22	1.58	1.57	1.88	2.03	1.78	1.83	1.96	2.16	2.24	2.56	2.46
n_1 = 3500 rpm	T_{2N}	Nm	131	195	209	252	274	241	–	–	–	–	–	–
		in.lb	1159	1726	1850	2230	2425	2133						
	T_{2B}	Nm	217	285	286	345	376	330	–	–	–	–	–	–
		in.lb	1920	2522	2531	3053	3328	2921						
	η	%	97	96	94	92	87	82	–	–	–	–	–	–
	f_t [a]		1.66	1.78	1.79	2.16	2.35	2.06	–	–	–	–	–	–

[a] f_t: Cyclic and continuous operation (see left page) Ratios i = 28 and i = 40 are self-locking at zero speed. The self-locking state may be overcome and therefore the gearhead should not replace a brake. For applications that run at a continuous speed of 3000 rpm or more in installation position F or G, please contact us.

Bearing lifespan L_{h10} (output bearing)

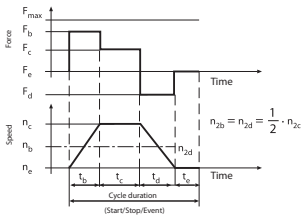

Output (VDT, VDH & VDS version)

Calculate the average axial and radial force F_{2am}, F_{2rm} [N]

Index "2" ≙ output

$\frac{F_{2am}}{F_{2rm}} \le 0.4$, $x_2 > 0$

no — Consult us!

yes

$$F_{2am} = \sqrt[3]{\frac{n_{2b} \cdot t_b \cdot F_{2ab}{}^3 + \ldots + n_{2n} \cdot t_n \cdot F_{2an}{}^3}{n_{2b} \cdot t_b + \ldots + n_{2n} \cdot t_n}}$$

$$F_{2rm} = \sqrt[3]{\frac{n_{2b} \cdot t_b \cdot F_{2rb}{}^3 + \ldots + n_{2n} \cdot t_n \cdot F_{2rn}{}^3}{n_{2b} \cdot t_b + \ldots + n_{2n} \cdot t_n}}$$

$$M_{2km} = \frac{F_{2am} \cdot y_2 + F_{2rm} \cdot (x_2 + z_2)}{W}$$

Calculate the average tilting torque $M_{2k\,m}$ [Nm] or [in.lb]

Z_2 [mm]	VDT	VDH	VDS
VD050	104	71.5	92.25
VD063	113.5	82	111.5
VD080	146.75	106.25	143.25
VD100	196	145.5	181

	metric
W	1000

$$M_{2\,k\,max} = \frac{F_{2\,a\,max} \cdot y_2 + F_{2\,r\,max} \cdot (x_2 + z_2)}{W}$$

Calculate the maximum tilting torque $M_{2k\,max}$ [Nm] or [in.lb]

Version	VD 050	VD 063	VD 080	VD 100
$M_{2K\,Max}$ [Nm]	409	843	1544	3059
$F_{2R\,Max}$ [N]	3800	6000	9000	14000
$F_{2A\,Max}$ [N]	5000	8250	13900	19500

$M_{2\,k\,max} \le M_{2\,K\,Max}$
$F_{2\,r\,max} \le F_{2\,R\,Max}$
$F_{2\,a\,max} \le F_{2\,A\,Max}$

no — Select a larger gearhead

yes

$K1_2$ [Nm]	VDT	VDH	VDS
VD 050	3050	2320	2580
VD 063	4600	3620	5600
VD 080	9190	9770	10990
VD 100	20800	15290	20400

$$n_{2\,m} = \frac{n_{2\,b} \cdot t_b + \ldots + n_{2\,n} \cdot t_n}{t_b + \ldots + t_n}$$

Calculate the average speed $n_{2\,m}$ [rpm]

P_t	T/H/S
i=4	1.5
i=7	0.72
i=10	0.6
i=16	0.5
i=28	0.4
i=40	0.36

$$L_{2\,h} = \frac{16666}{n_{2m}} \cdot \left[\frac{K1_2}{p_t \cdot T_{2m} + M_{2km}} \right]^{3.33}$$

Calculate the lifespan $L_{2\,h}$ [h]

lifespan $L_{2\,h}$ sufficient?

no — Select a larger gearhead

yes — Torque selection complete

VDS involute

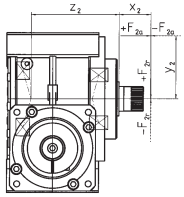

VDS smooth, keywayed

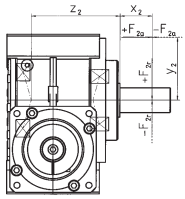

VDH smooth

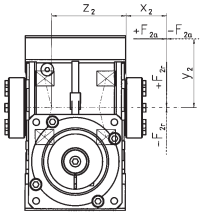

VDT

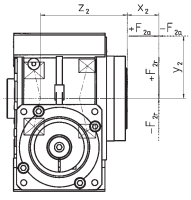

VDH keywayed

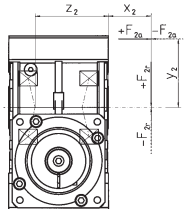

Rating for **torque limiters**

According to disengagement torque

As a rule, torque limiters are rated according to the required disengagement torque, which must be greater than the torque required for normal machine operation. The disengagement torque of the torque limiters is usually calculated in accordance with the drive specifications. The following calculation has proved to be a good rule of thumb:

$$T_{KN} \geq 1.5 \cdot T_{2b} \text{ [Nm]}$$

or

$$T_{KN} \geq 9550 \cdot \frac{P_{AN}}{n} \cdot 1.5 \text{ [Nm]}$$

T_{KN} = rated coupling torque [Nm]
T_{2b} = max. available acceleration torque [Nm]

T_{KN} = rated coupling torque [Nm]
P_{AN} = drive power [kw]
n = drive speed [rpm]

According to acceleration torque (start-up at no load)

S_A = Impact or load factor
S_A = 1 (uniform load)
S_A = 2 (non-uniform load)
S_A = 3 (impact load)

$$T_{KN} \geq \alpha \cdot J_L \geq \frac{J_L}{J_A + J_L} \cdot T_{2b} \cdot S_A \text{ [Nm]}$$

Values of $S_A = 2-3$ are usual for servo drives on machine tools.

T_{KN} = rated coupling torque [Nm]
α = angular acceleration [1/s²]

$$\alpha = \frac{\omega}{t} = \frac{\pi \cdot n}{t \cdot 30} \quad \frac{1}{s^2}$$

t = acceleration time [sec.]
ω = angular speed [1/s]
n = drive speed [rpm]
J_L = moment of inertia on load side [kgm²]
J_A = moment of inertia on drive side [kgm²]
T_{2b} = max. available acceleration torque [Nm]

According to acceleration and load torque (start-up with load)

$$T_{KN} \geq \alpha \cdot J_L + T_{AN} \geq \left[\frac{J_L}{J_A + J_L} \cdot (T_{2b} - T_{AN}) + T_{AN}\right] \cdot S_A \text{ [Nm]}$$

S_A = Impact or load factor
S_A = 1 (uniform load)
S_A = 2 (non-uniform load)
S_A = 3 (impact load)

Values of $S_A = 2\ 3$ are usual for servo drives on machine tools.

T_{KN} = rated coupling torque [Nm]
α = angular acceleration [1/s²]
t = acceleration time [sec.]
ω = angular speed [1/s]
n = drive speed [rpm]
J_L = moment of inertia on load side [kgm²]
T_{AN} = load torque [Nm]
J_A = moment of inertia on drive sidee [kgm²]
T_{2b} = max. available acceleration torque [Nm]

According to feed force

Spindle drive

$$T_{AN} = \frac{s \cdot F_V}{2000 \cdot \pi \cdot \eta} \text{ [Nm]}$$

T_{AN} = load torque [Nm]
S = ball screw pitch [mm]
F_V = feed force [N]
η = spindle efficiency

Timing belt drive

$$T_{AN} = \frac{d_0 \cdot F_V}{2000} \text{ [Nm]}$$

T_{AN} = load torque [Nm]
d_0 = pinion diameter (timing belt pulley) [mm]
F_V = feed force [N]

According to resonant frequency (TL 2 / 3 with bellows attachment)

The resonant frequency of the coupling must be higher or lower than the machine frequency. For the purpose of calculation, the drive is reduced to a two-mass system:

$$f_e = \frac{1}{2 \cdot \pi} \sqrt{C_T \cdot \frac{J_{Mach} + J_A}{J_{Mach} \cdot J_A}} \text{ [Hz]}$$

C_T = torsional rigidity of coupling [Nm/rad]
J_{Mach} = moment of inertia of machine [kgm²]
J_A = moment of inertia on drive side [kgm²]
f_e = resonant frequency of two-mass system [Hz]

According to torsional rigidity (TL 2 / 3 with bellows attachment)

Transmission errors due to a torsional load on the metal bellows:

$$\varphi = \frac{180}{\pi} \cdot \frac{T_{2b}}{C_T} \quad \textbf{[degrees]}$$

φ = angle of turn [degrees]
C_T = torsional rigidity of coupling [Nm/rad]
T_{2b} = max. available acceleration torque [Nm]

According to the function system

Load holding version: On TL 1 and TL models, the load holding version has a double load safety margin. Ensure that models with a bellows attachment (TL 2 / 3) are of adequate size. The blocking load in this case should not exceed the rated torque of the coupling.

Rating for **bellows couplings**

According to torque

In most cases, the couplings should be rated according to the maximum peak torque to be transmitted regularly. The peak torque must not exceed the rated torque of the coupling, i.e. the torque that can be transmitted continuously within the permissible speed and misalignment ranges. The following formula has proved to be a good rule of thumb:

$$T_{KN} \geq 1.5 \cdot T_{2b} \quad \textbf{[Nm]}$$

T_{KN} = rated coupling torque [Nm]
T_{2b} = max. available acceleration torque [Nm]

According to acceleration torques

For precise rating, the acceleration torque and the moment of inertia of the entire machine should be taken into consideration. Especially with servo motors, ensure that the acceleration or deceleration torque is several times greater than the rated torque.

$$T_{KN} \geq T_{2b} \cdot S_A \cdot \frac{J_L}{J_A + J_L} \quad \textbf{[Nm]}$$

T_{KN} = rated torque of coupling [Nm]

T_{2b} = max. available acceleration torque [Nm]
J_L = moment of inertia of machine [kgm²]
J_A = moment of inertia on drive side [kgm²]

S_A = Impact or load factor
S_A = 1 (uniform load)
S_A = 2 (non-uniform load)
S_A = 3 – 4 (impact load)

Values of S_A = 2 3 are usual for servo drives on machine tools.

According to resonant frequency

The resonant frequency of the coupling must be higher or lower than the machine frequency. For the purpose of calculation, the drive is reduced to a two-mass system:
Good design practice: $f_e \geq 2 \times f_{er}$

$$f_e = \frac{1}{2 \cdot p} \sqrt{C_T \cdot \frac{J_A + J_L}{J_A \cdot J_L}} \quad \textbf{[Hz]}$$

C_T = torsional rigidity of coupling [Nm/rad]
f_e = natural frequency of 2-mass system [HZ]
f_{er} = excitation frequency of drive [HZ]

Two-mass system

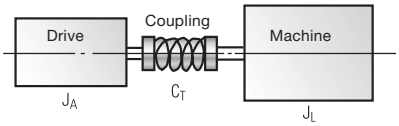

According to torsional rigidity

Transmission errors due to a torsional load on the metal bellows:

$$\varphi = \frac{180}{\pi} \cdot \frac{T_{2b}}{C_T} \quad \textbf{[degrees]}$$

φ = angle of turn [degrees]
C_T = torsional rigidity of coupling [Nm/rad]
T_{2b} = max. available acceleration torque [Nm]

The **alpha**bet

Acceleration torque (T_{2B})

The acceleration torque T_{2B} is the maximum permissible torque that can briefly be transmitted at the output by the gearhead after ≤ 1000 cycles. For > 1000 cycles, the → **impact factor** must be taken into account. T_{2B} is the limiting parameter in cyclic operation.

Adapter plate

WITTENSTEIN alpha uses a system of standardized adapter plates to connect the motor and the gearhead, making it possible to mount an WITTENSTEIN alpha gearhead to any desired motor without difficulty.

Angular minute

A degree is subdivided into 60 angular minutes (= 60 arcmin = 60'). In other words, if the torsional backlash is specified as 1 arcmin, for example, the output can be turned 1/60°. The repercussions for the actual application are determined by the arc length: $b = 2 \cdot \pi \cdot r \cdot \alpha° / 360°$. A pinion with a radius r = 500 mm on a gearhead with standard torsional backlash $j_t = 3'$ can be turned b = 0.4 mm.

Axial force (F_{2AMax})

In the case of SP⁺/LP⁺/SPK⁺, the axial force F_{2AMax} acting on a gearhead runs parallel to its output shaft. On a TP⁺, the force runs perpendicular to its output shaft. It may be applied with axial offset via a lever arm y_2 under certain circumstances, in which case it also generates a bending moment. If the axial force exceeds the permissible catalogue values, additional design features (e.g. axial bearings) must be implemented to absorb these forces.

Example with output shaft and flange:

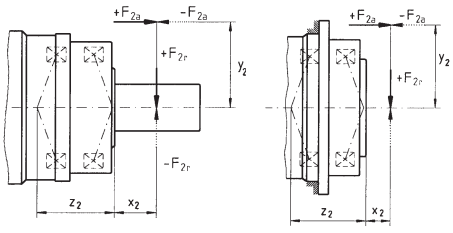

Bushing

If the motor shaft diameter is smaller than the → **clamping hub**, a bushing is used to compensate the difference in diameter.

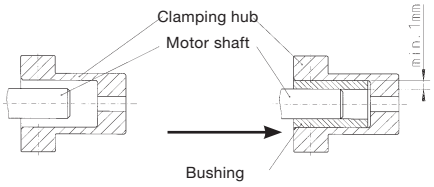

Clamping hub

The clamping hub ensures a frictional connection between the motor shaft and gearhead. A → **bushing** is used as the connecting element if the motor shaft diameter is smaller than that of the clamping hub.

Continuous operation (S1)

Continuous operation is defined by the → **duty cycle**. If the duty cycle is greater than 60 % or longer than 20 minutes, this qualifies as continuous operation. → **Operating modes**

Cyclic operation (S5)

Cyclic operation is defined via the → **duty cycle**. If the duty cycle is less than 60 % and shorter than 20 minutes, it qualified as cyclic operation **(→ operating modes)**.

cymex®

cymex® is the calculation software developed by our company for dimensioning complete drive trains. We can also provide training to enable you to make full use of all the possibilities provided by the software.

Degree of protection (IP)

The various degrees of protection are defined in DIN EN 60529 "Degrees of protection offered by enclosure (IP code)". The IP degree of protection (IP stands for International Protection) is represented by two digits. The first digit indicates the protection against the ingress of impurities and the second the protection against the ingress of water.

Example: **IP65**

Protection against impurities (Dust resistance)	Protection against water

Duty cycle (ED)

The duty cycle ED is determined by one cycle. The times for acceleration (t_b), constant travel if applicable (t_c) and deceleration (t_d) combined yield the duty cycle in minutes. The duty cycle is expressed as a percentage with inclusion of the pause time t_e.

$$ED\,[\%] = \frac{t_b + t_c + t_d}{t_b + t_c + t_d + t_e} \qquad \frac{\text{Motion duration}}{\text{Cycle duration}}$$

$$ED\,[\text{min}] = t_b + t_c + t_d$$

Efficiency (η)

Efficiency [%] η is the ratio of output power to input power. Power lost through friction reduces efficiency to less than 1 or 100 %.

$\eta = P_{out} / P_{in} = (P_{in} - P_{lost}) / P_{in}$

WITTENSTEIN alpha always measures the efficiency of a gearhead during operation at full load (T_{2B}). If the input power or torque are lower, the efficiency rating is also lower due to the constant no-load torque. Power losses do not increase as a result. Speed also has an effect on efficiency, as shown in the example diagram above.

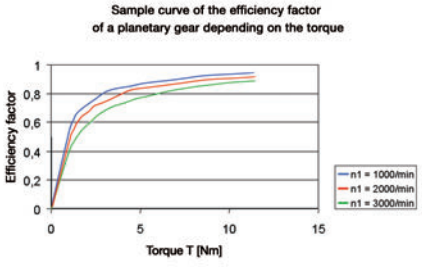

Emergency stop torque (T_{2Not})

The emergency stop torque [Nm] T_{2Not} is the maximum permissible torque at the gearhead output and must not be reached more than 1000 times during the life of the gearhead. It must never be exceeded! ($T_{2Not} = 2.5 \times T_{2B}$).

→ Refer to this term for further details.

High Speed (MC)

The High Speed version of our SP+ gearhead has been specially developed for applications in continuous operation at high input speeds, e.g. as found in the printing and packaging industries.

High Torque (MA)

The High Torque version of our TP+ gearhead has been specially developed for applications requiring extremely high torques and maximum rigidity.

MA = High Torque
MC = High Speed
MF = standard versions of our WITTENSTEIN alpha servo gearheads

Hysteresis curve

The hysteresis is measured to determine the torsional rigidity of a gearhead. The result of this measurement is known as the hysteresis curve.
If the input shaft is locked, the gearhead is loaded with a torque that increases continuously up to T_{2B} and is then relieved at the output in both directions. The torsional angle is plotted against the torque. This yields a closed curve from which the **→ torsional backlash** and **→ torsional rigidity** can be calculated.

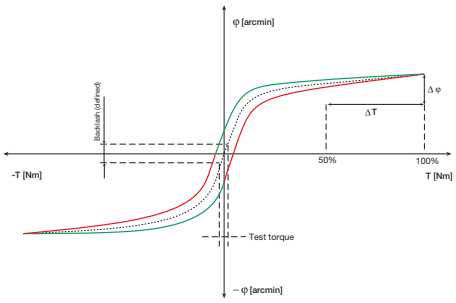

Impact factor (f_s)

The maximum permissible acceleration torque during cyclic operation specified in the catalog applies for a cycle rate less than 1000/h. Higher cycle rates combined with short acceleration times can cause vibrations in the drive train. Use the load factor f_s to include the resulting excess torque values in calculations.
The impact factor f_s can be determined with reference to the curve. This calculated value is multiplied by the actual acceleration torque T_{2b} and then compared with the maximum permissible acceleration torque T_{2B}. ($T_{2b} \cdot f_s = T_{2b,\,fs} < T_{2B}$)

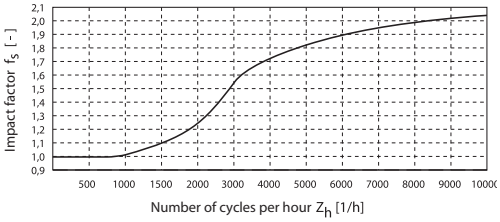

Jerk

Jerk is derived from acceleration and is defined as the change in acceleration within a unit of time. The term impact is used if the acceleration curve changes abruptly and the jerk is infinitely large.

Lateral force (F_R)

Lateral force is the force component acting at right angles to the output shaft with the SP+/LP+/SPK+ or parallel to the output flange with the TP+. It acts perpendicular to the axial force and can assume an axial distance of x_2 in relation to the shaft nut with the SP+/LP+) or shaft flange with the TP+, which acts as a lever arm. The lateral force produces a bending moment (see also axial force).

Mass moment of inertia (J)

The mass moment of inertia J is a measurement of the effort applied by an object to maintain its momentary condition (at rest or moving).

Mesh frequency (f_z)

The mesh frequency may cause problems regarding vibrations in an application, especially if the excitation frequency corresponds to the intrinsic frequency of the application.
The mesh frequency can be calculated for all SP+, TP+ , LP+ and alphira® gearheads using the formula $f_Z = 1{,}8 \cdot n_2$ [rpm] and is therefore independent of the ratio if the output speed is the same.
If it does indeed become problematic, the intrinsic frequency of the system can be changed or another gearhead (e.g. hypoid gearhead) with a different mesh frequency can be selected.

No load running torque (T_{012})

The no load running torque T_{012} is the torque which must be applied to a gearhead in order to overcome the internal friction; it is therefore considered lost torque. The values specified in the catalog are calculated by WITTENSTEIN alpha at a speed of $n_1 = 3000$ rpm and an ambient temperature of 20 °C.

T_{012}: 0 (no load) 1→2 (from input end to output end)

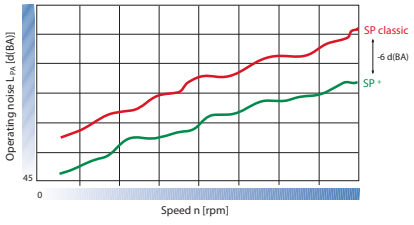

Change in operating noise in relation to the ratio

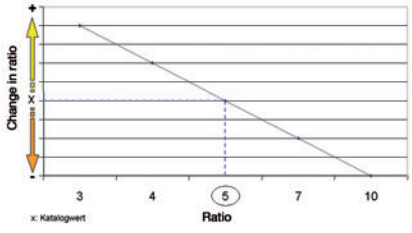

Nominal torque (T_{2N})

The nominal torque [Nm] T_{2N} is the torque continuously transmitted by a gearhead over a long period of time, i.e. in **→continuous operation** (without wear).

Operating modes (continuous operation **S1** and cyclic operation **S5**)

When selecting a gearhead, it is important to consider whether the motion profile is characterized by frequent acceleration and deceleration phases in cyclic operation (S5) as well as pauses, or whether it is designed for continuous operation (S1), i.e. with long phases of constant motion.

Operating noise (L_{PA})

Low noise level L_{PA} is a factor of growing importance for environmental and health reasons. WITTENSTEIN alpha has succeeded in reducing the noise of the new SP+ gearheads by another 6 dB(A) over the former SP units (i.e. sound reduced to one quarter). Noise levels are now currently 64 - 70 dB(A) depending on the size of the gearhead.
The gear ratio and speed both affect the noise level. The relationships are demonstrated in the following trend graphs. As a general rule: A higher speed means a higher noise level, while a higher ratio means a lower noise level. The values specified in our catalog relate to gearheads with the ratio i = 5 at a speed of n = 3000 rpm.

Positioning accuracy

The positioning accuracy is determined by the angular deviation from a setpoint and equals the sum of the torsional angles due to load **→(torsional rigidity and torsional backlash)** and kinetics **→(synchronization error)** occurring simultaneously in practise.

Rate of mass moment of inertia (λ = Lambda)

The ratio of mass moment of inertia λ is the ratio of external inertia (application side) to internal inertia (motor and gearhead side). It is an important parameter determining the controllability of an application. Accurate control of dynamic processes becomes more difficult with differing mass moments of inertia and as λ becomes greater. WITTENSTEIN alpha recommends that a guideline value of λ < 5 is maintained. A gearhead reduces the external mass moment of inertia by a factor of $1/i^2$.

$$\lambda = \frac{J_{external}}{J_{internal}}$$

Ratio (i)

The gear ratio i indicates the factor by which the gearhead transforms the three relevant parameters of motion (speed, torque and mass moment of inertia).
The factor is a result of the geometry of the gearing elements (Example: i = 10).

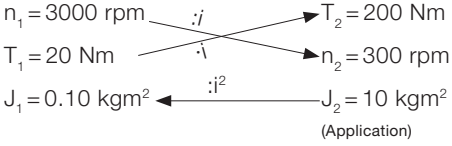

Speed (n)

Two speeds are of relevance when dimensioning a gearhead: the maximum speed and the nominal speed at the input. The maximum permissible speed n_{1Max} must not be exceeded because it serves as the basis for dimensioning **→cyclic operation**. The nominal speed n_{1N} must not be exceeded in **→continuous operation**.
The housing temperature limits the nominal speed, which must not exceed 90 °C. The nominal input speed specified in the catalogue applies to an ambient temperature of 20 °C. As can be seen in the diagram below, the temperature limit is reached more quickly in the presence of an elevated outside temperature. In other words, the nominal input speed must be reduced if the ambient temperature is high. The values applicable to your gearhead are available from WITTENSTEIN alpha on request.

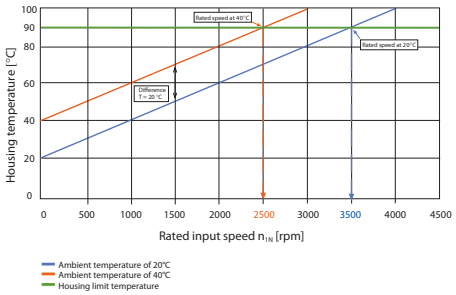

Synchronization error

The synchronization error is equal to the variations in speed measured between the input and output during one revolution of the output shaft. The error is caused by manufacturing tolerances and results in minute angular deviations and fluctuations in ratio.

Technical data

The technical data relating to our products can be downloaded from our homepage. Alternatively, you can send your requests, suggestions and comments to the address below.

Tilting moment (M_{2K})

The tilting torque M_{2K} is a result of the **→ axial and lateral forces** applied and their respective points of application in relation to the inner radial bearing on the output side.

Torque (M)

The torque is the actual driving force of a rotary motion. It is the product of lever arm and force. $M = F \cdot l$

Torsional backlash (j_t)

Torsional backlash j_t is the maximum angle of torsion of the output shaft in relation to the input. Torsional backlash is measured with the input shaft locked. The output is then loaded with a defined test torque in order to overcome the internal gearhead friction. The main factor affecting torsional backlash is the face clearance between the gear teeth. The low torsional backlash of WITTENSTEIN alpha gearheads is due to their high manufacturing accuracy and the specific combination of gear wheels.

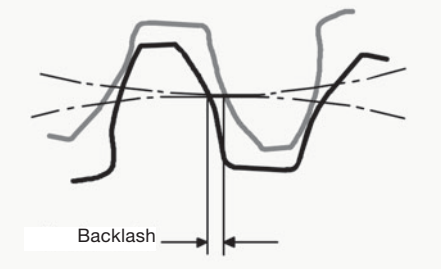

Torsional rigidity (C_{t21})

Torsional rigidity [Nm/arcmin] C_{t21} is defined as the quotient of applied torque and generated torsion angle ($C_{t21} = \Delta T/\Delta\varphi$). It consequently shows the torque required to turn the output shaft by one angular minute. The torsional rigidity can be determined from the **→ hysteresis curve**. Only the area between 50 % and 100 % of T_{2B} is considered for because this area of the curve profile can be considered linear.

WITTENSTEIN alpha speedline®

If required, we can deliver a new SP⁺,TP⁺ or LP⁺ within 24 or 48 hours ex works.

→ Refer to this term for further details.

Formulae

Torque [Nm]	$T = J \cdot \alpha$	J = Mass moment of inertia [kgm^2] α = An [1/s^2]
Torque [Nm]	$T = F \cdot l$	F = Force [N] l = Lever, length [m]
Acceleration force [N]	$F_b = m \cdot a$	m = Mass [kg] a = Linear acceleration [m/s^2]
Frictional force [N]	$F_{frict} = m \cdot g \cdot \mu$	g = Acceleration due to gravity 9.81 m/s^2 μ = Coefficient of friction
Angular velocity [1/s]	$\omega = 2 \cdot \pi \cdot n / 60$	n = Speed [rpm] π = PI = 3.14...
Linear velocity [m/s]	$v = \omega \cdot r$	v = Linear velocity [m/s] r = Radius [m]
Linear velocity [m/s] (spindle)	$v_{sp} = \omega \cdot h / (2 \cdot \pi)$	h = Screw pitch [m]
Linear acceleration [m/s^2]	$a = v / t_b$	t_b = Acceleration time [s]
Angular acceleration [1/s^2]	$\alpha = \omega / t_b$	
Pinion path [mm]	$s = m_n \cdot z \cdot \pi / \cos \beta$	m_n = Standard module [mm] z = Number of teeth [-] β = Inclination angle [°]

Conversion table

1 mm	= 0.039 in
1 Nm	= 8.85 in lb
1 kgcm^2	= 8.85 x 10^{-4} in.lb.s^2
1 N	= 0.225 lb$_f$
1 kg	= 2.21 lb$_m$

Symbols

Symbol	Unit	Designation
C	Nm/arcmin	Rigidity
ED	%, min	Duty cycle
F	N	Force
f_s	–	Load factor
f_t	–	Temperature factor
f_e	–	Factor for duty cycle
i	–	Ratio
j	arcmin	Backlash
J	kgm^2	Moment of inertia
K1	Nm	Factor for bearing calculation
L	h	Service life
L_{PA}	dB(A)	Operating noise
m	kg	Mass
M	Nm	Torque
n	rpm	Speed
p	–	Exponent for bearing calculation
η	%	Efficiency
t	s	Time
T	Nm	Torque
v	m/min	Linear velocity
x	mm	Distance between lateral force and shaft collar
y	mm	Distance between axial force and center of gearhead
z	mm	Factor for bearing calculation
Z	1/h	Number of cycles

Index

Capital letter	Permissible values
Small letter	Actual values
1	Drive
2	Output
A/a	Axial
B/b	Acceleration
c	Constant
cym	cymex® values (load-related characteristic values)
d	Deceleration
e	Pause
h	Hours
K/k	Tilting
m	Mean
Max/max	Maximum
Mot	Motor
N	Nominal
Not/not	Emergency stop
0	No load
R/r	Radial
t	Torsional
T	Tangential

Order information

Gearhead type	Type code	Gearhead variations	Gearhead model	Number of stages
TP 004 – TP 500 SP 060 – SP 240 TK+ 004 – TK+ 110 TPK+ 010 – TPK+ 110 SK+ 060 – SK+ 180 SPK+ 075 – SPK+ 180 HG+ 060 – HG+ 180	S = Standard F = Food lubrication G = Grease W = Washdown (SP+, TP+, SPK+, TPK+)	M = Motor attachment gearhead	A = High Torque (only TP+) C = High Speed (only SP+) F = Standard	1 = 1-stage 2 = 2-stage 3 = 3-stage (only with High Torque)

* shrink discs see Chapter HG+

Gearhead type	Gearhead variations	Gearhead model	Number of stages	Ratios
LP 050 – LP 155 LPB 070 – LPB 120 LK 050 – LK 155 LPK 050 – LPK 155 CP 40 – CP 115	M = Motor attachment gearhead	O = Standard	1 = 1-stage 2 = 2-stage 3 = 3-stage (LPK+)	See technical data sheets.

Gearhead type	Distance between axes	Gearhead variations	Gearhead model	Number of stages
VDT = TP flange VDH = hollow shaft VDS = SP output	050 063 080 100	M = Motor attachment gearhead	F = Standard	1 = 1-stage

Mounting positions for V-DRIVE®

Mounting position (only relevant for oil volume)

Output side A:
View of motor interface
Only valid for VDS and VDT

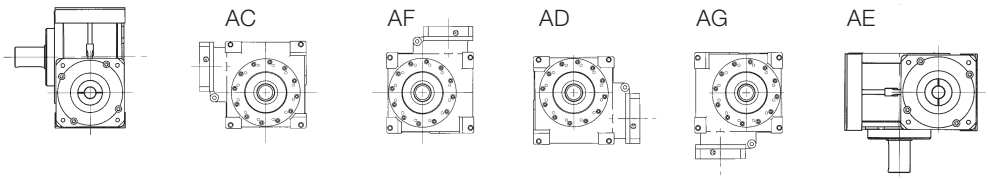

Output side B:
View of motor interface
Only valid for VDS and VDT

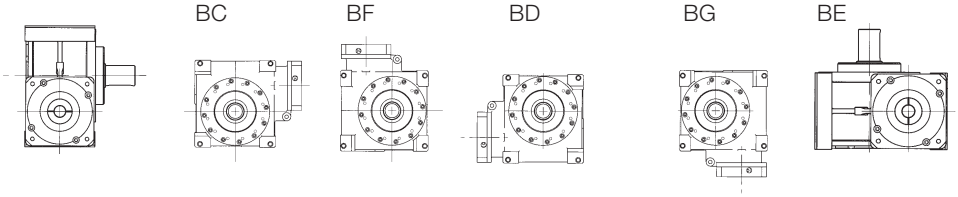

Ratios
See technical data sheets.

Output shape
0 = smooth shaft/flange
1 = shaft with key
2 = involute to DIN 5480
3 = system output
4 = other
5 = hollow shaft
6 = 2 hollow shaft ends
(see technical data sheets)

Clamping hub bore hole diameter
(see technical data sheets and clamping hub diameter table)

Backlash
1 = Standard
0 = Reduced
(see technical data sheets)

x = Special model

Output shape
0 = smooth shaft (for LP⁺ and LPK⁺ models only; for LP⁺ smooth shaft available with reduced torsional backlash only)
1 = shaft with key
LPB⁺
1 = centering on output side
3 = centering on motor side
(see technical data sheets)

Clamping hub bore hole diameter
1 = Standard
(see technical data sheets)

Backlash
1 = Standard
(not LP⁺ with smooth shaft)
0 = Reduced
(LP⁺/LPB⁺ only)

x = Special model

Ratios
See technical data sheets.

Output shape
0 = smooth shaft/flange
(VDT, VDH, VDS)
1 = shaft with key
(VDH, VDS)
2 = involute to DIN 5480
(VDS)
4 = other
(see technical data sheets)

Clamping hub bore hole diameter
3 = 19 mm (050)
4 = 28 mm (063)
5 = 35 mm (080)
7 = 48 mm (100)

Backlash
1 = Standard

VDH – number of shrink discs
0 = no shrink disc
1 = one shrink disc
2 = two shrink discs

x = Special model

Mounting positions for right-angle gearheads

For information purposes only – not required when placing orders!

B5/V3
Output shaft, horizontal
Motor shaft upwards

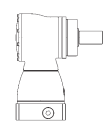

B5/V1
Output shaft, horizontal
Motor shaft downwards

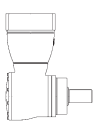

V1/B5
Output shaft, vertical
Motor shaft, horizontal

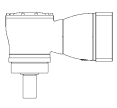

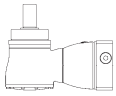

V3/B5
Output shaft, vertical, upwards
Motor shaft, horizontal

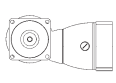

B5/B5
Output shaft, horizontal
Motor shaft, horizontal

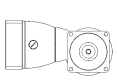

Order codes

TP+/SP+/TK+/TPK+/SK+/SPK+/HG+

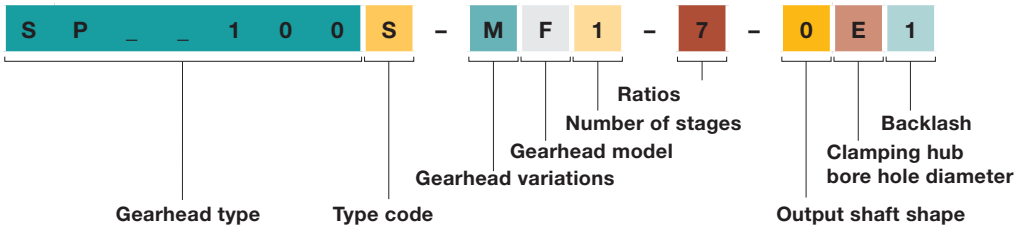

LP+/LPB+/LK+/LPK+/alphira (CP)

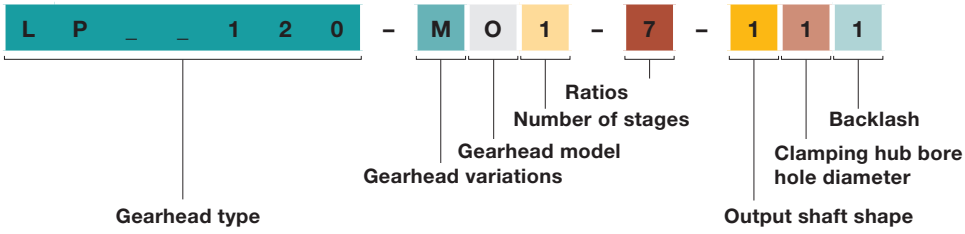

V-DRIVE®

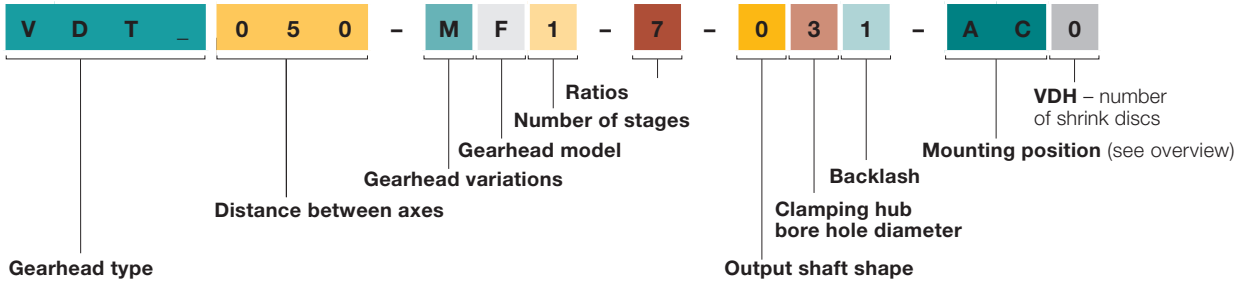

Mounting positions for coaxial gearheads

For information purposes only not required when placing orders!

B5 – horizontal

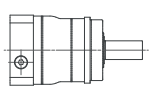

V1 – vertical Output shaft downwards

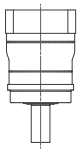

V3 – vertical Output shaft upwards

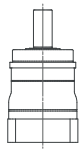

S – can be tilted ±90° from a horizontal position

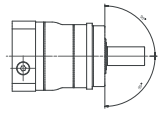

Clamping hub diameter

(the technical data sheet contains all diameters available for TP+, SP+, TK+,TPK+, SK+, SPK+ and HG+ models)

Code letter	mm	Code letter	mm
B	11	I	32
C	14	K	38
D	16	L	42
E	19	M	48
G	24	N	55
H	28	O	60

Intermediate diameters possible in combination with a bushing with a minimum thickness of 1 mm.

Order codes



Order information

Rack and assembly jig

Rack type
ZST = Rack
ZMT = Assembly jig

Module
200 = 2.00
300 = 3.00
400 = 4.00
500 = 5.00
600 = 6.00

Version
PA5 = Premium Class
SB6 = Smart Class
VB6 = Value Class
PD5 = Assembly jig

Length
100 = Assembly jig (module 2 – 3)
156 = Assembly jig (module 4 – 6)
480 = Smart Class (module 2 – 4)
167/333 = Premium Class (module 2)
250 = Premium Class (module 3)
500 = Premium Class (module 2 – 6)
1000 = Value Class (module 2 – 6)

Premium Class+ and Value Class pinion

Designation
RMT = Pinion mounted ex works
RMX = Pinion mounted offset 180°
(for VC pinions only)

Module
200 = 2.00
300 = 3.00
400 = 4.00
500 = 5.00
600 = 6.00

Version
PC5 = Premium Class
VC6 = Value Class

Number of teeth
(see technical data sheet)

Premium Class RTP and Standard Class RSP pinions

Designation
RSP = Standard Class RSP pinion for SP
Involute output as per DIN 5480
RTP = Premium Class RTP pinion for TP output
RTPA = Premium Class RTP pinion for TP High Torque output

Gearhead size
For SP output:
060, 075, 100, 140, 180, 210, 240
For TP output:
004, 010, 025, 050, 110, 300, 500
(see technical data sheets)

Module
A02 = 2.00
A03 = 3.00
A04 = 4.00
A05 = 5.00
A06 = 6.00

Tolerance class
5e24 = Premium Class RTP/RTPA
6e25 = Standard Class RSP

Number of teeth
(see technical data sheet)

Torque limiter and bellows coupling

Model
Torque limiter
TL1 / TL 2 / TL3
Bellows coupling
BC2 / BC3 / BCT / EC2

Series – Nominal torque
(see technical data sheets)

Length options
A = first series
B = second series only for TL2 / TL3 / BC2 / BC3 and EC

Version
Torque limiter
W = Single position re-engagement (standard version)
D = Multi-position
G = Load holding
F = Full disengagement
X = Special
Bellows coupling
A = standard

Internal diameter D_1 H7
Hole circle diameter D_3 (BCT)
TL1: D = D_1 = D_2
(for miniature version, 1.5 –10 Nm)

Drive, internal diameter version
0 = smooth shaft
1 = with key to DIN 6885 Shape A
2 = Involute to DIN 5480
4 = Other (specific for key)
5 = Key connection (TL1 only, type C)

Internal diameter D_2 H7
TL1: D = D_1 = D_2
(for miniature version, 1.5 – 10 Nm)

Drive, internal diameter version
0 = smooth shaft
1 = with key to DIN 6885 Shape A
2 = Involute to DIN 5480
4 = Other (specific for key)
5 = Key connection (TL1 only, type C)

Adjustment range
(only for TL1 /TL2 /TL3)
A = first series
B = second series
C = third series

Disengagement torque
(only for TL1 / TL2 / TL3)

Order codes

Rack and assembly jig

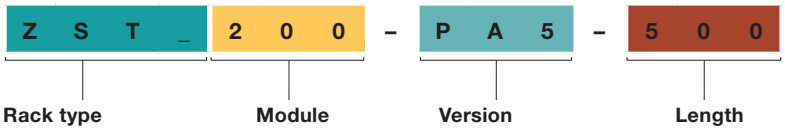

Premium Class+ and Value Class pinion

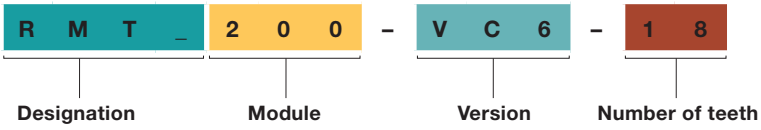

Premium Class RTP and Standard Class RSP pinions

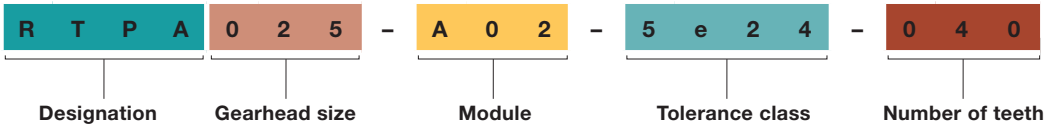

Torque limiter and bellows couplings

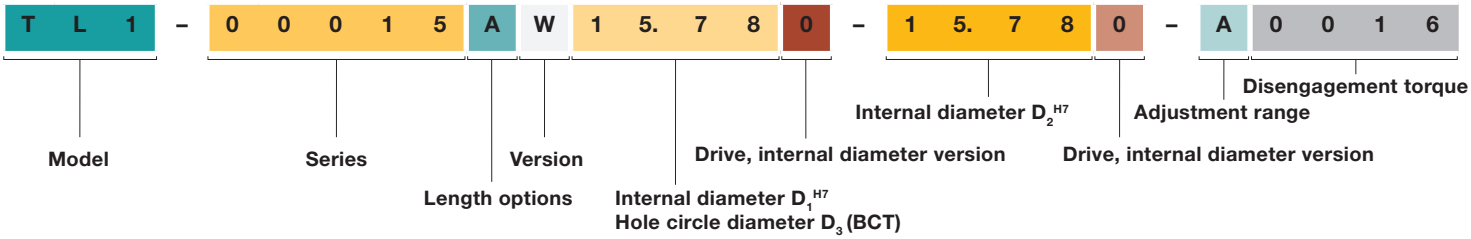

YOUR NOTE

WITTENSTEIN

WITTENSTEIN Ltd. · 3 The Glades · Festival Way · Stoke-on-Trent ST1 5SQ · United Kingdom · Tel. +44 870 844 0120


www.wittenstein.co.uk

WITTENSTEINalpha_products_en_2008_II Technical changes reserved